PARTS CATALOG

OF

BARDONS & OLIVER

NOS. 33 & 34

HYDRALECTRIC CUT-OFF MACHINES

BARDONS & OLIVER, INC.

13, OHIO, U.S.A.

BARDONS & OLIVER, INC.
5800 HARPER ROAD
SOLON, OHIO 44139
440-498-5800 FAX 440-498-2001

BARDONS & OLIVER NOS. 33 & 34 HYDRALECTRIC CUT-OFF MACHINE

PARTS CATALOG

TABLE OF CONTENTS

Collet Chuck - Unit 'A'	Page 2
Roller Feed - Unit 'B'	Page 3
Head & Column - Unit 'C'	Page 4
Feed Pump - Unit 'D'	Page 5
Hydraulic Cross Slide & Knee - Unit 'E'	Page 6
Spindle - Unit 'F'	Page 10
Stock Stop - Unit 'G'	Page 11
Spindle Drive Transmission - Unit 'H'	Page 12

In order to maintain the accuracy and finish requirements of today, it is necessary and economical to replace worn parts. This catalog has been prepared to simplify the ordering of repair parts.

WHEN ORDERING: -

1. SPECIFY AMOUNT WANTED
2. GIVE SERIAL NUMBER OF MACHINE*
3. GIVE NUMBER AND NAME OF PART EXACTLY AS SHOWN IN CATALOG

EXAMPLE: -

Required: - Roller shaft bushing for the roller feed.

ORDER: -

1. Roller shaft bushing, part #B-16 for No. 33 Hydralectric Cut-Off Machine Serial #17208

As some parts are fitted in the assembly, these parts will be sent finished as far as possible with allowance for fitting where required.

*THE SERIAL NUMBER OF THE MACHINE IS STAMPED ON THE NAME PLATE

COLLET CHUCK -- UNIT "A"

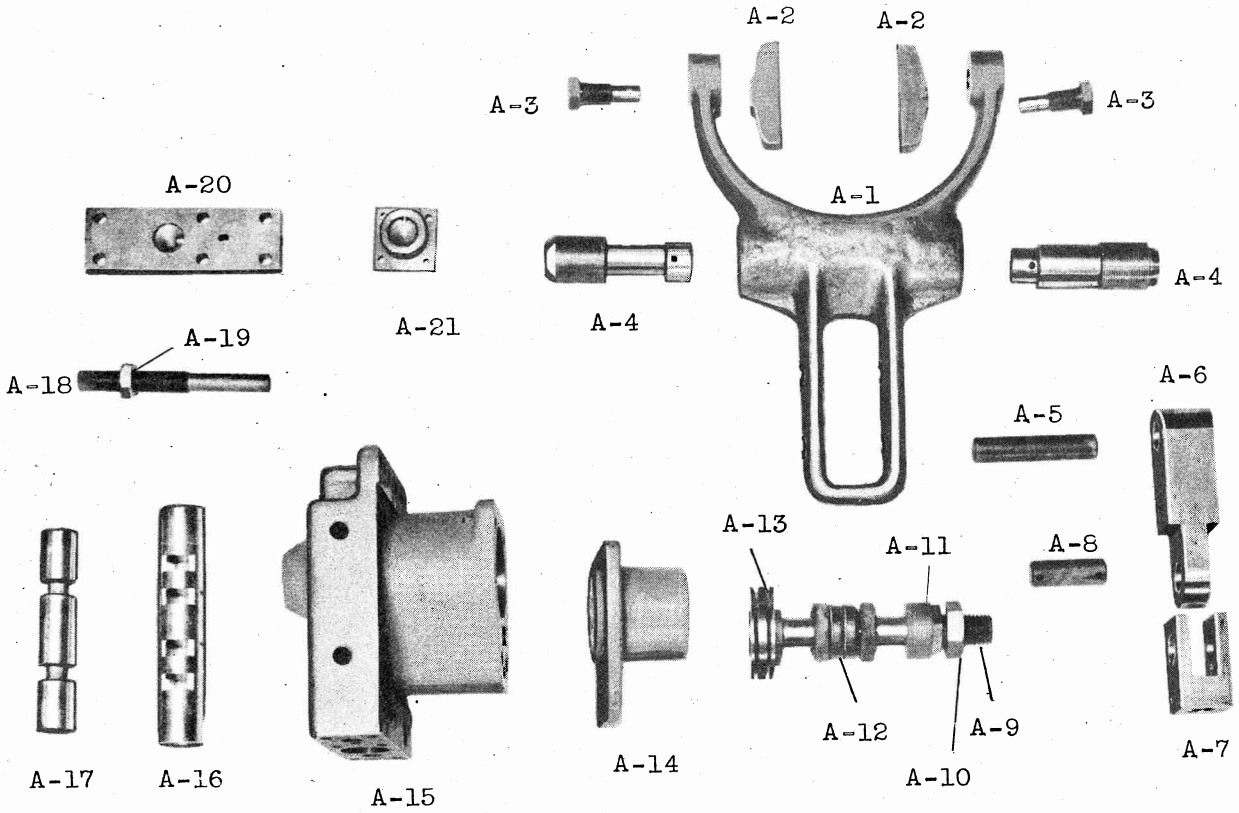

YOKE ASSEMBLY

A-1 Yoke
A-2 Wedge Yoke Shoe
A-3 Yoke Shoe Screw
A-4 Yoke Stud
A-5 Connecting Pin

COLLET CHUCK--CYLINDER ASSEMBLY

A-6 Link
A-7 Adjusting Nut

COLLET CHUCK--CYLINDER ASSEMBLY (CONTINUED)

A-8 Connecting Pin
A-9 Piston complete
A-10 1-8-N.C. Jam Nut
A-11 Plug
A-12 Piston Rod Packing
A-13 Piston
A-14 Cylinder Closer
A-15 Cylinder
A-16 Sleeve
A-17 Plunger
A-18 Stop Screw
A-19 3/4-16-N.F. Jam Nut
A-20 Cover
A-21 Cover

ROLLER FEED -- UNIT "B"

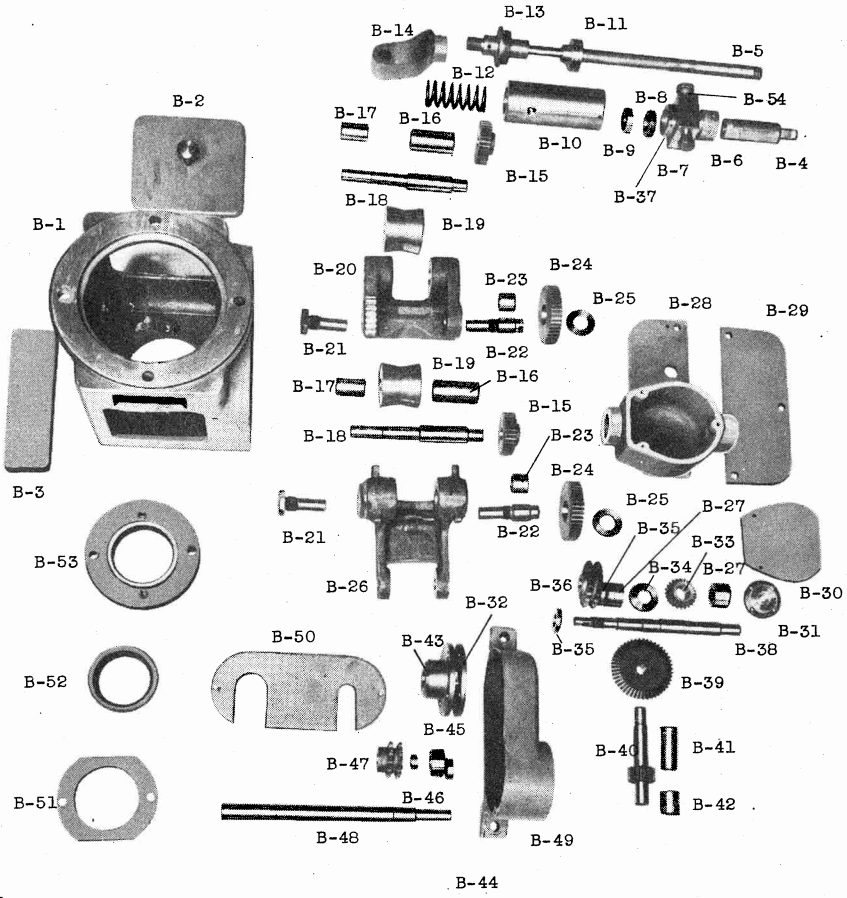

HOUSING ASSEMBLY

B-1 Bracket
B-2 Top Cover
B-3 Bracket Cover
B-51 Retainer Plate
B-52 Guide Bushing
B-53 Stock Guide Bushing

YOKE CYLINDER ASSEMBLY

B-4 Adjusting Sleeve Extension
B-5 Piston Rod
B-6 Adjusting Sleeve
B-7 Yoke Adjusting Block
B-8 Packing Nut
B-9 Oil Seal #60250
B-10 Yoke Cylinder
B-11 Yoke Piston
B-12 Spring
B-13 Yoke Cylinder Extension
B-14 Connecting Link
B-37 Adjusting Sleeve Nut
B-54 Adjusting Block Screw

ROLLER ASSEMBLY

B-15 Roller Shaft Gear
B-16 Roller Shaft Bushing
B-17 Roller Shaft Bushing
B-18 Roller Shaft
B-19 Roller
B-20 Upper Yoke
B-21 Yoke Bracket Screw

ROLLER ASSEMBLY CONT'D

B-22 Yoke Bracket Screw
B-23 Internal Gear Bushing
B-24 Internal Gear
B-25 Internal Gear Washer
B-26 Lower Yoke

BEVEL GEAR ASSEMBLY

B-27 Hyatt Roller Bearing #178058
B-28 Bevel Gear Bracket
B-29 Gear Cover
B-30 Bevel Gear Cover
B-31 Bearing Retainer
B-33 Bevel Gear
B-34 Bearing Retainer
B-35 Bearing Retainer
B-36 Sprocket 18T
B-38 Bevel Gear Shaft
B-39 Bevel Gear
B-40 Pinion Shaft
B-41 Pinion Shaft Bushing
B-42 Pinion Shaft Bushing

CHAIN DRIVE ASSEMBLY

B-32 Bearing Retainer
B-43 Bearing Cup
B-44 Oil Seal #60149
B-45 M.R.C. Bearing #5204-K
B-46 Spacer
B-47 Sprocket 13-T
B-48 Drive Shaft
B-49 Chain Guard
B-50 Chain Cover

HEAD & COLUMN - UNIT "C"

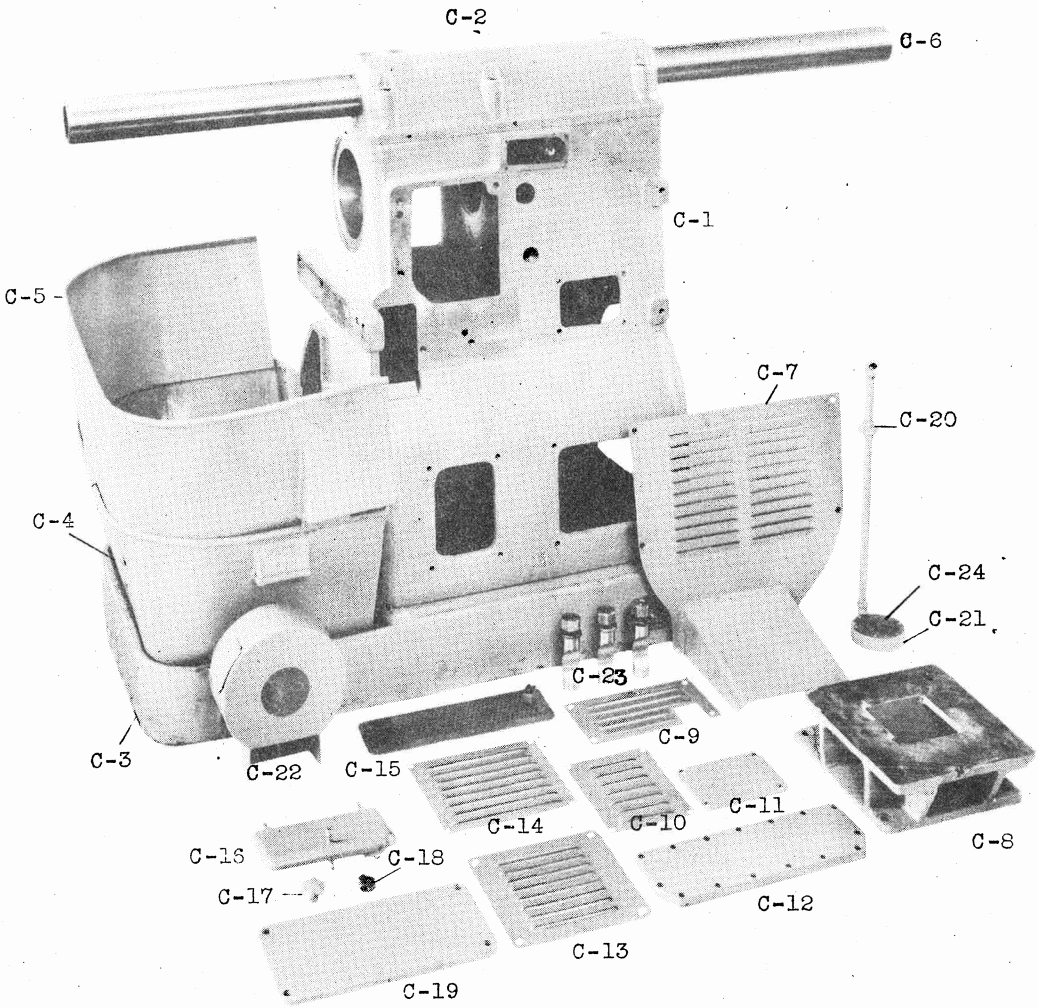

C-1 Column
C-2 Housing
C-3 Base
C-4 Chip Pan
C-5 Splash Guard
C-6 Stop Bar
C-7 Rear End Louvre
C-8 Motor Plate
C-9 Front Cover
C-10 Side Louvre
C-11 Cover
C-12 Rear Cover
C-13 Cover
C-14 Side Louvre
C-15 Screen
C-16 Cover
C-17 Binder Screw Knob
C-18 Cam Latch
C-19 Front Cover
C-20 1/2 Union
C-21 Strainer Body
C-22 Spindle Guard
C-23 Binder Bolt
C-24 Strainer Screen

FEED PUMP - UNIT "D"

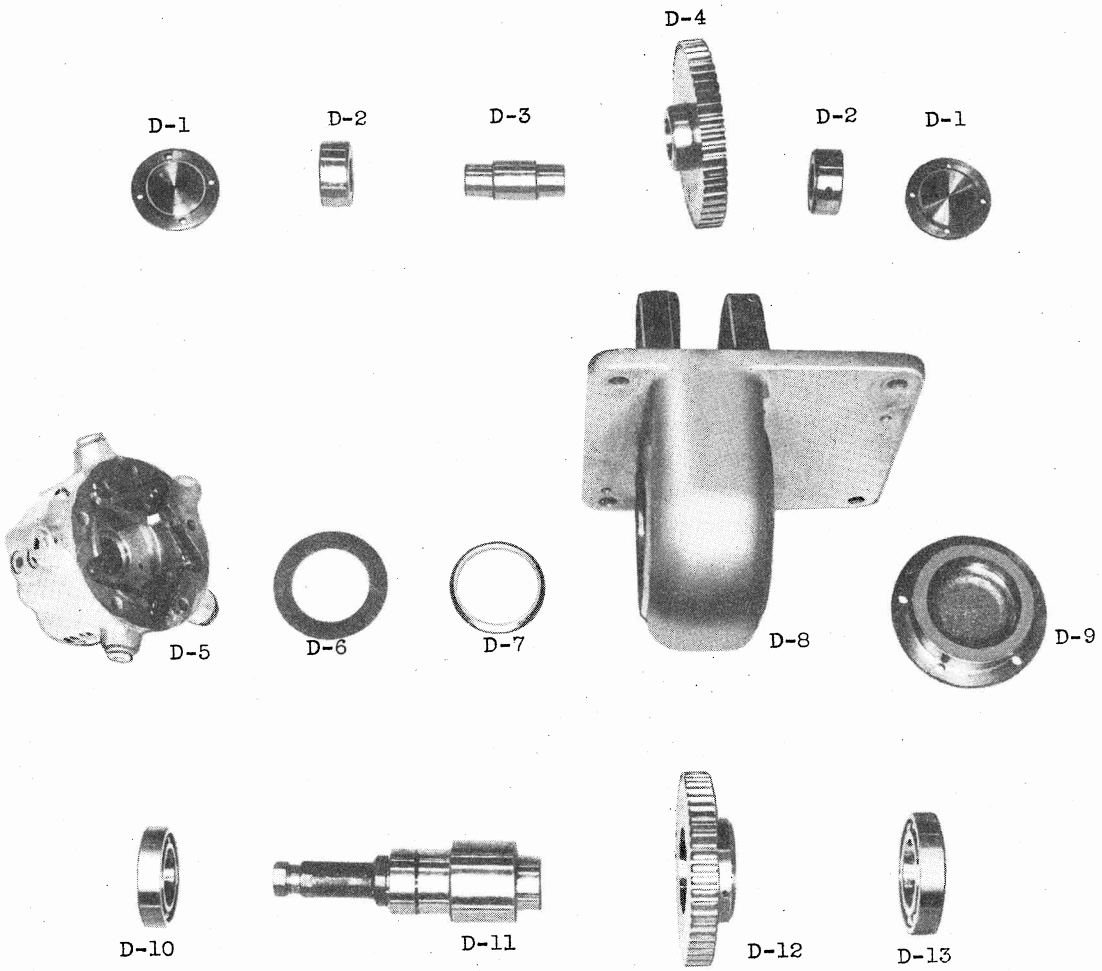

D-1 Bearing Retainer
D-2 Hyatt Bearing C-305
D-3 Internal Gear Shaft
D-4 Internal Gear 52-T
D-5 Barnes Pump P. A. -3109-A-3
D-6 Barnes Spacer P.A. -3109-A-3
D-7 Spacer
D-8 Pump Bracket
D-9 Barnes Closer P.A. -3109-A-3
D-10 M.R.C. Bearing 212-S
D-11 Barnes Shaft P.A. -3109-A-3
D-12 Pump Gear 52-T
D-13 M.R.C. Bearing 210-S

HYDRAULIC CROSS-SLIDES & KNEE - UNIT "E"

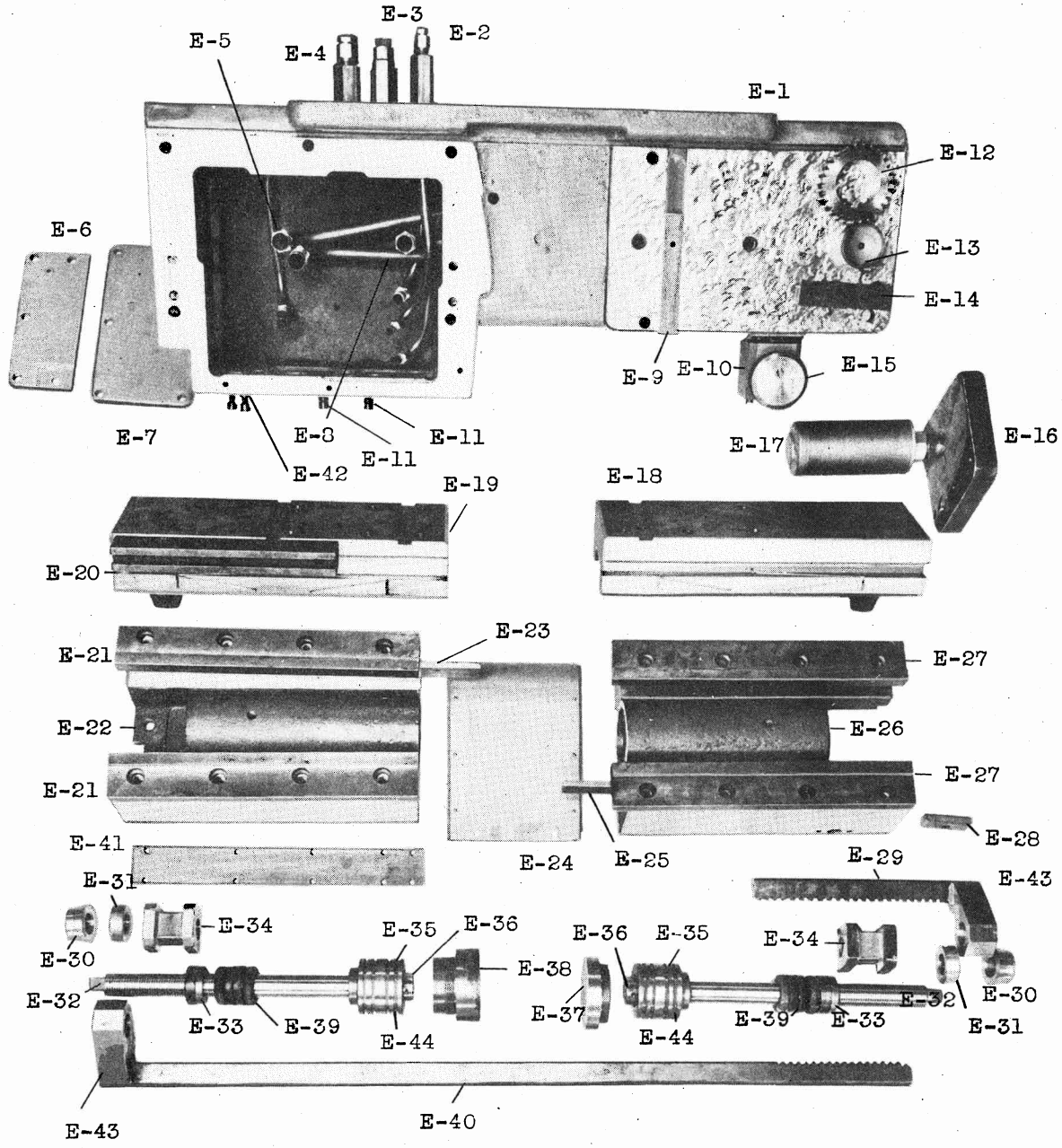

KNEE ASSEMBLY

E-1 Knee
E-2 Pipe Coupling
E-3 Pipe Coupling
E-4 Pipe Coupling
E-5 12-FB Parker Fitting
E-6 Cover
E-7 Cover
E-8 3/4 O.D. Copper Tubing
E-9 Key
E-10 Oil Filler Body

E-11 3/8-16-N.C.x 3/4 L. Socket Head Cap Screw
E-12 Equal. Pinion
E-13 Equal. Pinion Stud
E-14 Rack Support
E-15 Oil Filler Cap
E-16 Filter Plate
E-17 Vickers Filter #17415
E-24 Rack Guard
E-42 Lever Stop Washer

FRONT SLIDE & SADDLE ASSEMBLY

E-19 Front Slide
E-20 Tee Slot Bracket
E-21 Front Saddle Caps
E-22 Front Saddle
E-23 Front Taper Gib
E-30 Dial
E-31 Locknut
E-32 Piston Rod

FRONT SLIDE & SADDLE ASSEMBLY (CONTINUED)

E-33 Packing Gland
E-34 Slide Adjusting Nut
E-35 Piston
E-36 Piston Lock-Nut
E-38 Front Cylinder Head
E-39 Piston Rod Packing
E-40 Equal. Rack (long)
E-41 Plate
E-43 Rack End
E-44 Piston Rings

REAR SLIDE & SADDLE ASSEMBLY

E-18 Rear Slide
E-25 Rear Taper Gib
E-26 Rear Saddle
E-27 Rear Saddle Caps
E-28 Equal. Rack Shoe
E-29 Equal. Rack (Short)
E-30 Dial
E-31 Locknut
E-32 Piston Rod
E-33 Packing Gland
E-34 Slide Adjusting Nut
E-35 Piston
E-36 Piston Locknut
E-37 Rear Cylinder Head
E-39 Piston Rod Packing
E-43 Rack End
E-44 Piston Ring

HYDRAULIC CROSS-SLIDES & KNEE - UNIT "E"

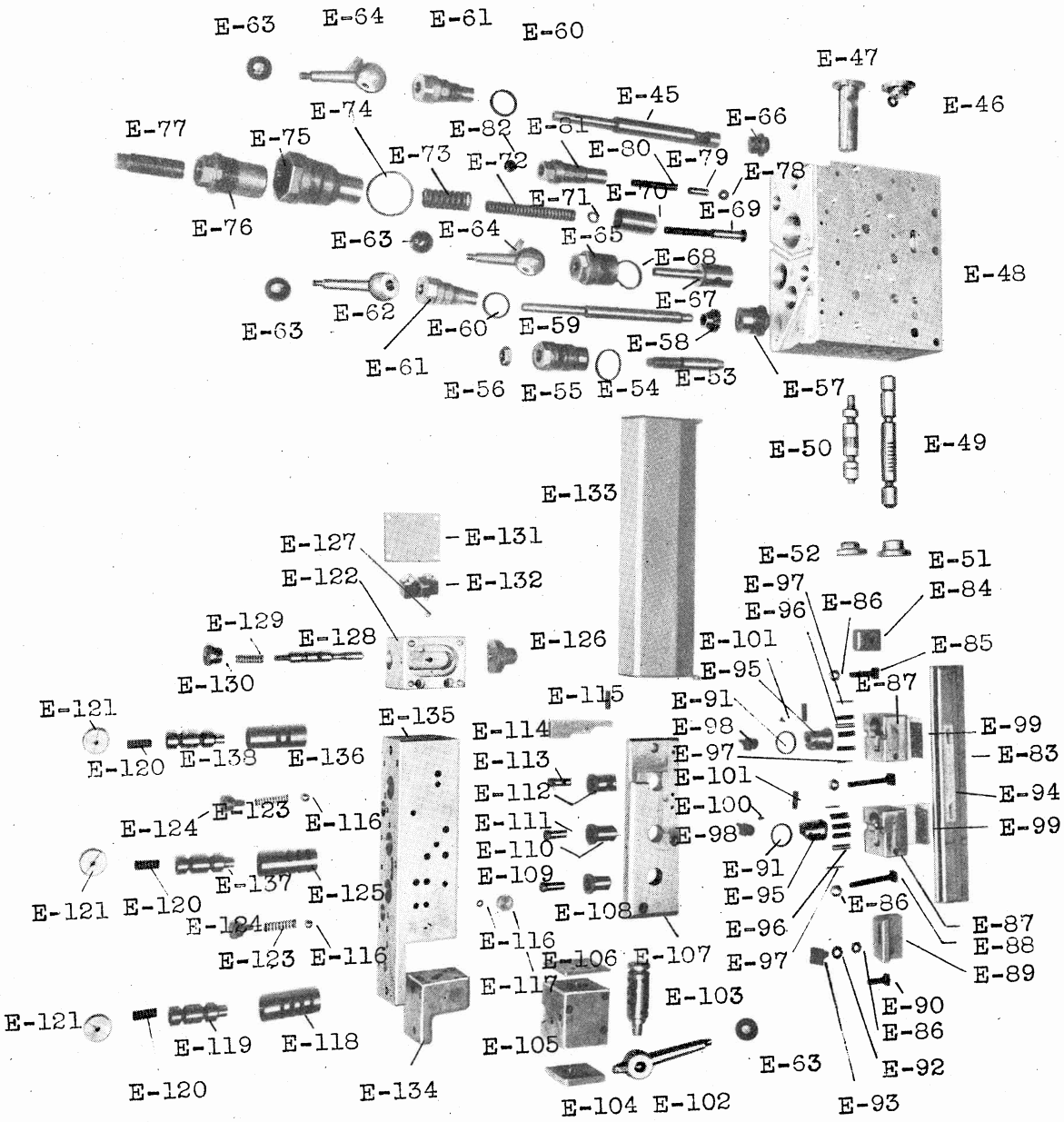

PILOT VALVE BLOCK ASSEMBLY

E-45 Cam
E-46 Cover
E-47 Cover
E-48 Valve Block
E-49 Reversing Valve Plunger
E-50 Traverse Valve Plunger
E-51 Cover
E-52 Cover
E-53 Needle Valve
E-54 Washer
E-55 Needle Valve Guide
E-56 3/4-16-N.F. Jam Nut
E-57 Plug
E-58 Pinion
E-59 Pinion Shaft
E-60 Washer
E-61 Sleeve
E-62 Lever
E-63 1-3/8 Dia. Bakelite Ball
E-64 Lever
E-65 Sleeve
E-66 Plug
E-67 Roller Feed Release Valve
E-68 Washer
E-69 Valve
E-70 Valve
E-71 Spring Bushing
E-72 Spring
E-73 Spring
E-74 Washer
E-75 Valve Body
E-76 Valve Cap
E-77 Adjusting Screw
E-78 3/4 Dia. Steel Ball
E-79 Relief Valve Pin
E-80 Relief Valve Spring
E-81 Relief Valve
E-82 3/8 Pipe Plug

CONTROL DOGS & GUARD ASSEMBLY

E-83 Tee Slot Bracket
E-84 Dog
E-85 T-Bolt
E-86 3/8-16-N.C. Jam Nut
E-87 Feed Block
E-88 T-Bolt
E-89 Collet Dog Block
E-90 T-Bolt
E-91 Leather Washer
E-92 Washer
E-93 Collet Dog
E-94 Scale

CONTROL DOGS & GUARD ASSEMBLY (CONTINUED)

E-95 Plunger
E-96 Spring
E-97 1/8 Dia. x 1-1/2 L. Drill Rod
E-98 Tumbler
E-99 Feed Block Cover
E-100 Stop Pin
E-101 5/16 Dia. x 1-1/8 L. Hard
E-133 Guard

HAND COLLET CONTROL ASSEMBLY

E-63 1-3/8 Dia. Bakelite Ball
E-102 Lever
E-103 Valve
E-104 Collet Control Cover
E-105 Collet Control Block
E-106 C.C.C. Cover
E-107 Control Block Cover
E-108 Bushing
E-109 Pin
E-110 Feed Bushing
E-111 Feed Pin
E-112 Return Bushing
E-113 Return Pin
E-114 Return Lever
E-115 5/16 Dia. x 1-1/8 L. Hard Pin
E-116 1/2 Dia. Steel Ball
E-117 Plug
E-118 Collet Valve Sleeve
E-119 Collet Valve
E-120 Valve Spring
E-121 Plug
E-123 Spring
E-124 Plug
E-125 Feed Valve Sleeve
E-134 End Cover Block
E-135 Control Block
E-136 Return Valve Sleeve
E-137 Feed Valve
E-138 Return Valve

STOCK STOP CONTROL ASSEMBLY

E-122 Block
E-126 Cap
E-127 1/4 Dia. Steel Ball
E-128 Plunger
E-129 Stock Stop Spring
E-130 Spring Cap
E-131 Block Cover
E-132 Allen Bradley PBSJ 20-14

SPINDLE - UNIT "F"

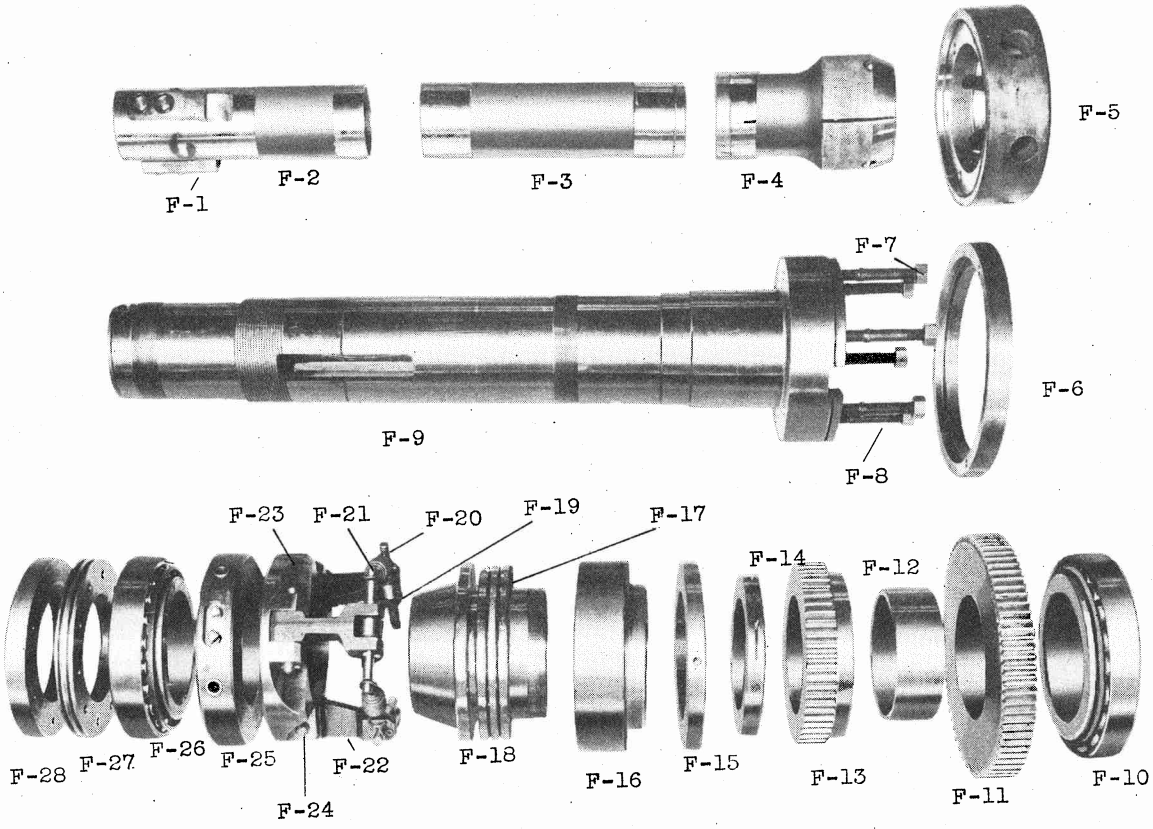

COLLET ASSEMBLY

F-1 Follower Shoe
F-2 Follower Extension
F-3 Follower
F-4 Collet
F-5 Collet Ring
F-7 9/16 -12-N.C. Hex. Nut
F-8 Collet Ring Stud

FINGER HOLDER ASSEMBLY

F-19 Finger Roller
F-20 Roller Pin
F-21 Spring
F-22 Finger
F-23 Finger Holder
F-24 Finger Pivot Pin

SPINDLE ASSEMBLY

F-6 Spindle Guard Ring
F-9 Spindle
F-10 Timken Bearing (#2) 86650/86100
F-11 Large Spindle Gear
F-12 Spacing Collar
F-13 Small Spindle Gear
F-14 Spindle Gear Nut
F-25 Adjusting Nut
F-26 Timken Bearing (#2) 74550/74850
F-27 Bearing Retaining Ring
F-28 Bearing Adjusting Nut

WEDGE ASSEMBLY

F-15 Wedge Nut
F-16 Wedge Cup
F-17 Wedge Thrust Bearing
F-18 Wedge

STOCK STOP - UNIT "G"

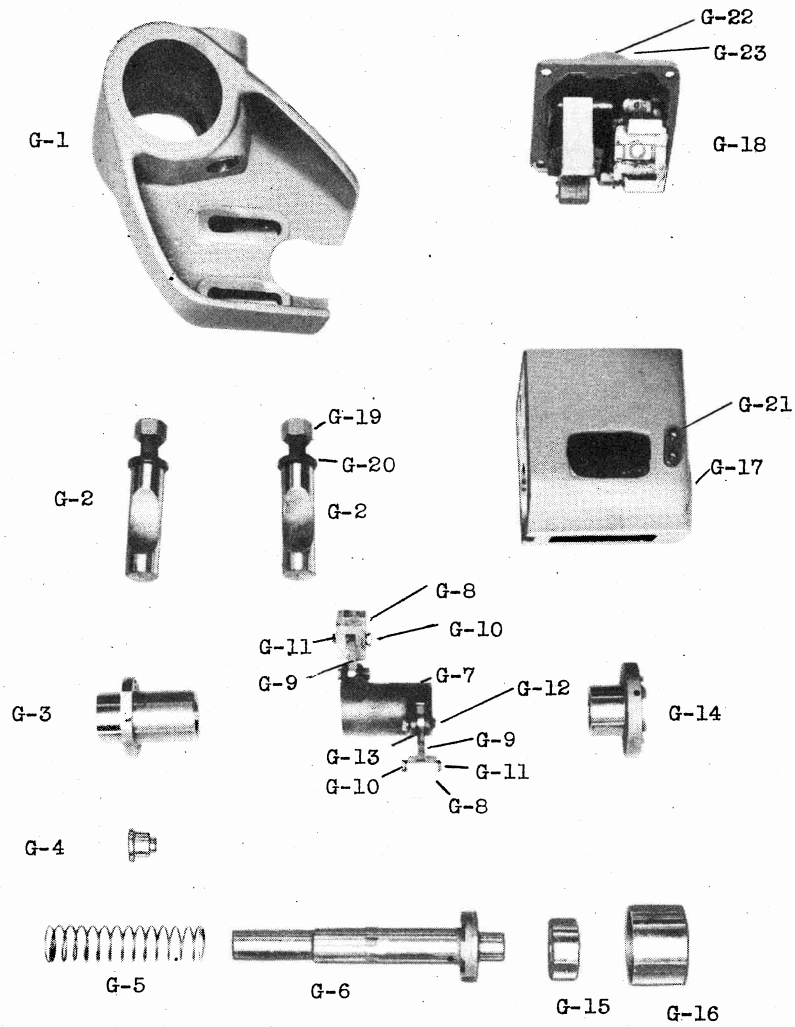

G-1	Bracket
G-2	Binder Bolt
G-3	Sleeve
G-4	Spring Retainer
G-5	Spring
G-6	Shaft
G-7	Crank Lever
G-8	NAMCO #16KK100D Solenoid
G-9	Link
G-10	1/4-28-N.F. Jam Nut
G-11	Solenoid Pin
G-12	5/16-24-N.F. Jam Nut
G-13	Crank Pin
G-14	Cam
G-15	M.R.C. Bearing #5206-F
G-16	Stop
G-17	Box
G-18	Cover Bracket
G-19	3/4-10-N.C. Hex. Nut
G-20	Washer
G-21	Key
G-22	Junction Box
G-23	Cover

SPINDLE DRIVE TRANSMISSION - UNIT "H"

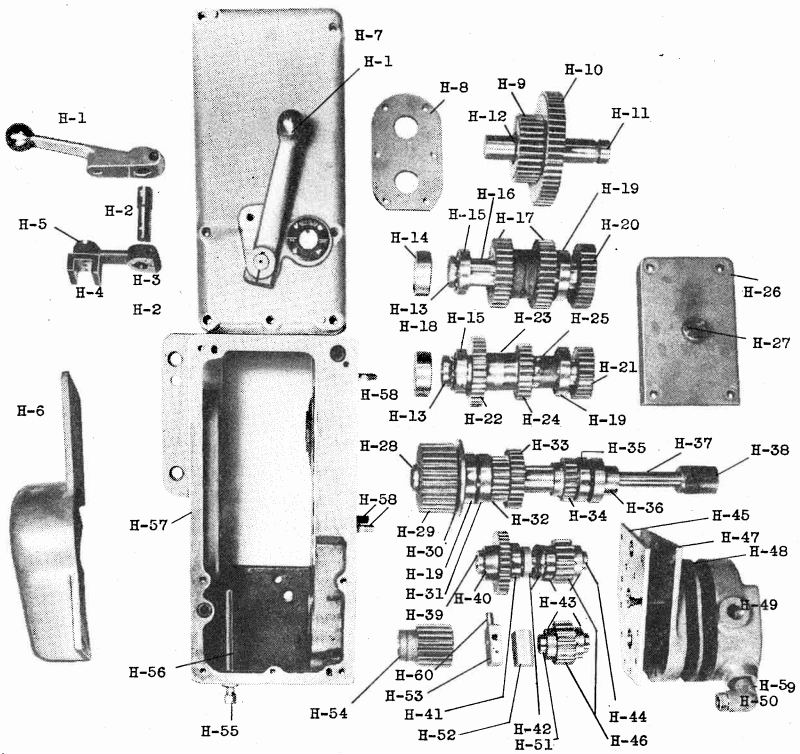

TRANSMISSION BOX ASSEMBLY

H-1 Lever
H-2 Lever Shaft
H-3 Lever
H-4 Fork
H-5 Fork Collar
H-6 Chain Guard
H-7 Transmission Cover
H-8 Oil Pump Cover
H-26 Change Gear Cover
H-27 Knob
H-55 #10-FB Parker Fitting
H-56 3/8 x 6L. Pipe
H-57 Transmission Bracket
H-58 Gear Cover Stud

3rd SHAFT ASSEMBLY

H-13 Bearing Locknut & Washer N-07 & W-07
H-14 Spacer
H-15 M.R.C. Ball Bearing 207-S
H-16 3rd Shaft
H-17 3rd Shaft Gear
H-19 M.R.C. Ball Bearing 2-8-MF
H-20 Change Gear

5th SHAFT ASSEMBLY

H-19 M.R.C. Ball Bearing 208-MF
H-28 Bearing Locknut & Washer N-06 & W-06
H-29 Driven Sprocket
H-30 Bearing Closer
H-31 M.R.C. Ball Bearing 208-S
H-32 Sliding Gear 21-T.
H-33 Sliding Gear 28-T.
H-34 20T. Gear
H-35 M.R.C. Ball Bearing 207-MF
H-36 Bearing Spacer
H-37 5th Shaft
H-38 Shaft Coupling

2nd INTERNAL GEAR ASSEMBLY

H-9 Internal Sliding Gear 30-T.
H-10 Internal Sliding Gear 52-T.
H-11 Gear Stud
H-12 Hyatt Roller Bearing 306-NRA

4th SHAFT ASSEMBLY

H-13 Bearing Locknut & Washer N-07 & W-07
H-15 M.R.C. Ball Bearing 207-S
H-18 Spacer
H-19 M.R.C. Ball Bearing 208-MF
H-21 Change Gear
H-22 33-T. Gear
H-23 Spacer
H-24 26-T. Gear
H-25 4th Shaft

PUMP GEAR ASSEMBLY

H-39 Bearing Locknut & Washer N-05 & W-05
H-40 30-T. Gear
H-41 M.R.C. Ball Bearing 206-S
H-42 John Crane #SC-125-143
H-43 Hyatt Roller Bearing 1205 T.S.
H-44 Pump Gear Shaft
H-46 Oil Pump Gear 15-T.
H-51 Pump Gear Stud

OIL PUMP ASSEMBLY

H-45 Oil Pump Plate
H-47 Oil Pump Body
H-48 Oil Pump Plate
H-49 Oil Pump Cover
H-50 12RBB Parker Fitting
H-52 Block
H-53 Pump Body
H-59 3/4 Close Nipple
H-60 Plunger
H-54 Drive Sprocket

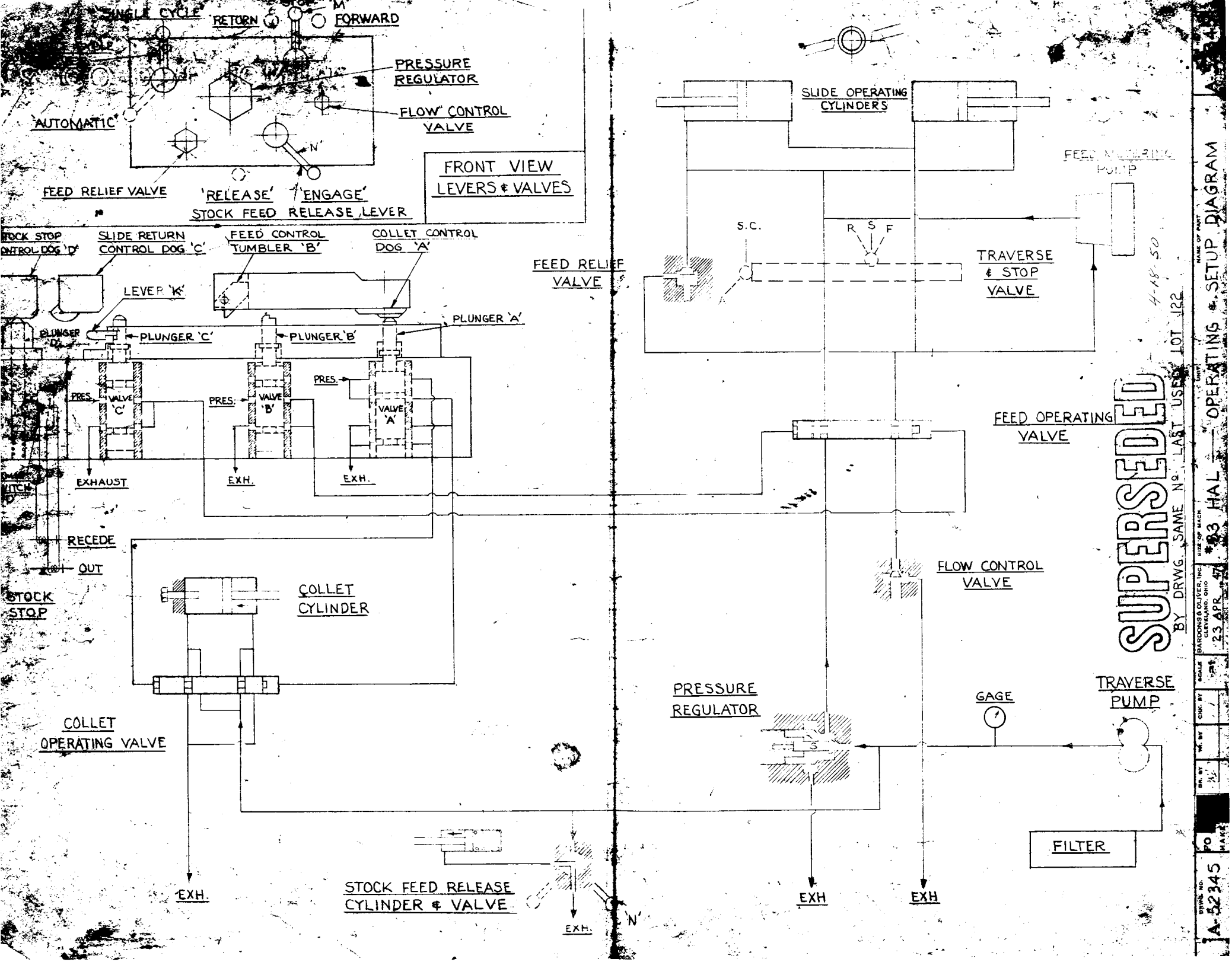
SINGLE CYCLE
RETURN
'M'
FORWARD
PRESSURE REGULATOR
FLOW CONTROL VALVE
AUTOMATIC
'N'
FEED RELIEF VALVE
'RELEASE'
'ENGAGE'
STOCK FEED RELEASE LEVER
FRONT VIEW LEVERS & VALVES
STOCK STOP CONTROL DOG 'D'
SLIDE RETURN CONTROL DOG 'C'
FEED CONTROL TUMBLER 'B'
COLLET CONTROL DOG 'A'
LEVER 'K'
PLUNGER 'D'
PLUNGER 'C'
PLUNGER 'B'
PLUNGER 'A'
PRES.
VALVE 'C'
VALVE 'B'
VALVE 'A'
EXHAUST
EXH.
RECEDE
OUT
STOCK STOP
COLLET CYLINDER
COLLET OPERATING VALVE
STOCK FEED RELEASE CYLINDER & VALVE
FEED RELIEF VALVE
SLIDE OPERATING CYLINDERS
S.C.
R S F
TRAVERSE & STOP VALVE
FEED OPERATING VALVE
FLOW CONTROL VALVE
PRESSURE REGULATOR
GAGE
TRAVERSE PUMP
FILTER
SUPERSEDED
BY DRWG. SAME No. LAST USED LOT 122
4-18-50
OPERATING & SETUP DIAGRAM
#23 HAL
BARDONS & OLIVER, INC. CLEVELAND, OHIO
23 APR
JA-52345

ASSEMBLY DIMENSIONS

FROM TOP OF VALVE STEM TO TOP OF CONTROL BLOCK	FROM BOTTOM OF COVER TO BOTTOM OF PIN
A - 5/16	A - 5/16
B - 5/16	B - 5/16
C - 5/16	C - 5/16

D - 1/16 3 PLACES

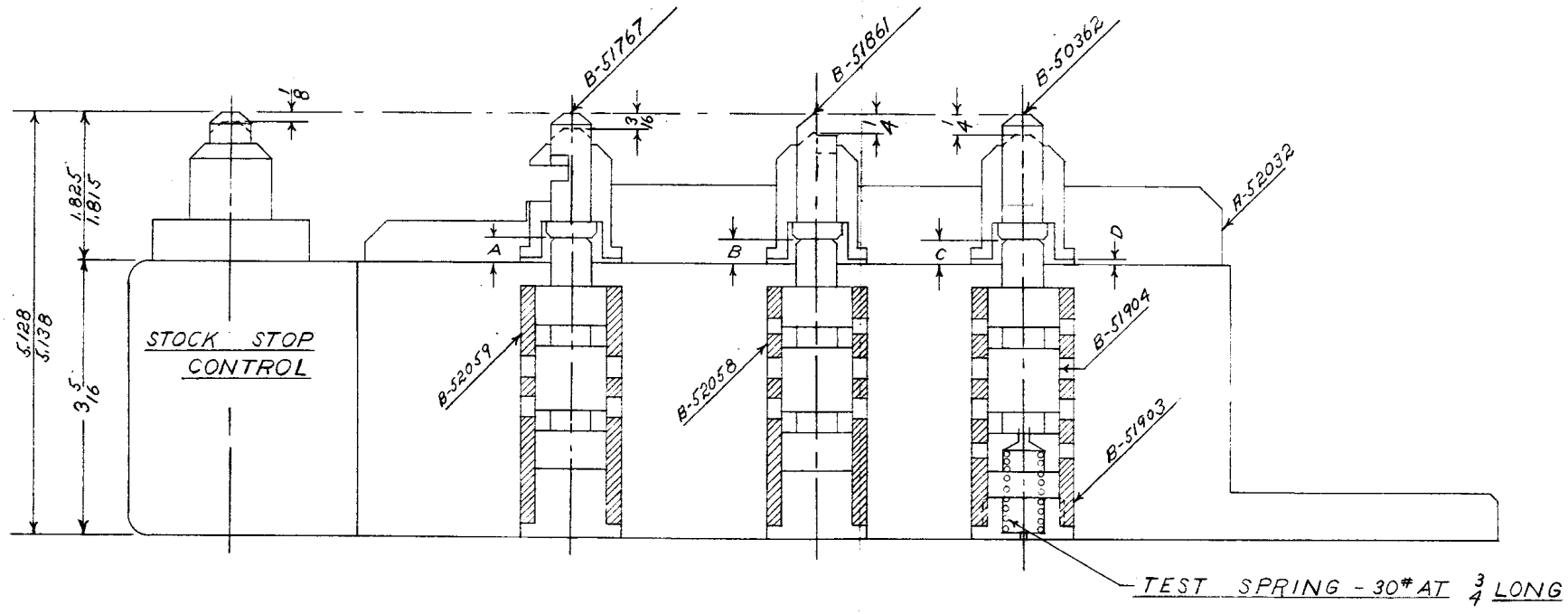

FIRST USED ON LOT 122 - S.O. M-1713
M-1714
M-1797

DRWG. NO.	FO	DR. BY	TR. BY	CHK. BY	SCALE	BARDONS & OLIVER, INC. CLEVELAND, OHIO	SIZE OF MACH.	UNIT	NAME OF PART	DRWG. NO.
A-52525	MAKE	EEP			1=1	6-5 47	#35 HAL.	H.C.S. & K.	CONTROL BLOCK ASSEM	A-52525

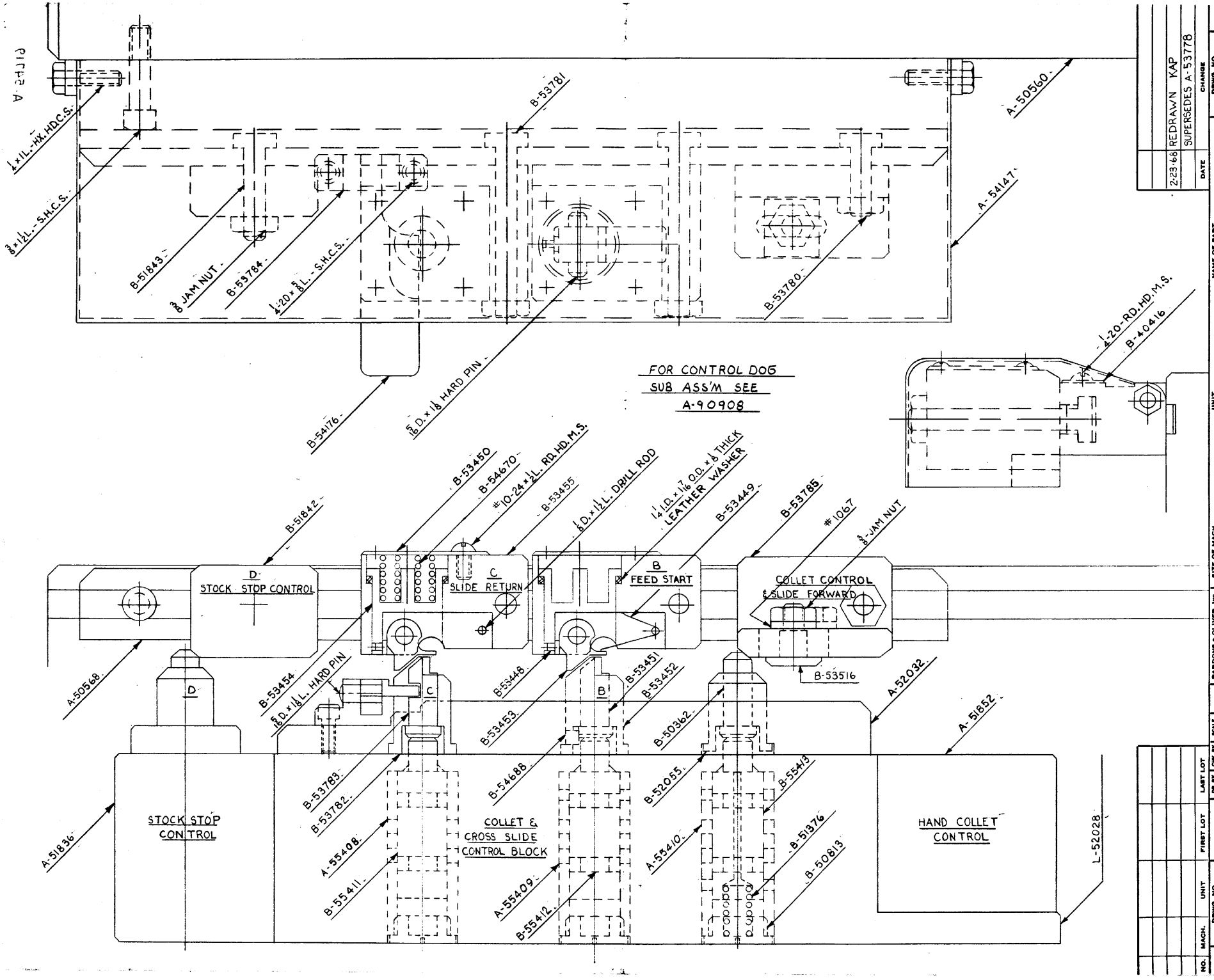
1/4 x 1 L. - HX. HDC. S.
3/8 x 1 1/2 L. - S.H.C.S.
B-51843
3/8 JAM NUT
B-53784
1/4-20 x 5/8 L. - S.H.C.S.
B-53781
A-50560
A-54147
B-53780
B-54176
5/16 D. x 1 1/8 HARD PIN
FOR CONTROL DOG
SUB ASS'M SEE
A-90908
1/4-20-RD. HD. M.S.
B-40416
B-53450
B-54670
#10-24 x 1/2 L. RD. HD. M.S.
B-53455
1/8 D. x 1 1/2 L. DRILL ROD
1/4 I.D. x 1/16 O.D. x 1/8 THICK
LEATHER WASHER
B-53449
B-53785
#10-6.7
3/8 JAM NUT
B-51842
D
STOCK STOP CONTROL
C
SLIDE RETURN
B
FEED START
COLLET CONTROL
& SLIDE FORWARD
B-53516
A-50568
B-53454
5/16 D. x 1 1/8 L. HARD PIN
B-53448
B-53453
B-53451
B-53452
B-50362
A-52032
A-51852
B-53783
B-53782
B-54688
B-52055
B-55413
A-55408
B-55411
A-55409
B-55412
A-55410
B-51376
B-50813
A-51836
STOCK STOP
CONTROL
COLLET &
CROSS SLIDE
CONTROL BLOCK
HAND COLLET
CONTROL
L-52028
2-23-68 REDRAWN KAP
SUPERSEDES A-53778
DATE
CHANGE
DRWG. NO.
A-54719
NAME OF PART
CONTROL DOGS & GUARD
UNIT
H.C.S. & K.
SIZE OF MACH.
#33 HAL
BARDONS & OLIVER, INC.
CLEVELAND, OHIO
JUNE 10 1948
SCALE
1-1
DR. BY
KAP
CHK. BY
HK
LAST LOT
FIRST LOT
FO
MAKE
NO.
MACH.
DRWG. NO.
A-54719
UNIT

LITHO. IN UNITED STATES OF AMERICA 33 H.C.O.M. -11-49