PARTS CATALOG

FOR

BARDONS & OLIVER

No's. 35 & 36

AUTOMATIC
CUTTING-OFF
LATHES

BARDONS & OLIVER, INC.

, OHIO

BARDONS & OLIVER, INC.
5800 HARPER ROAD
SOLON, OHIO 44139
440-498-5800 FAX 440-498-2001

NOS. 35 & 36 AUTOMATIC CUTTING-OFF LATHES PARTS CATALOG

TABLE OF CONTENTS

CROP END LATHE		PAGE 1
COUPLING LATHE		PAGE 1
SPINDLE	UNIT 'A'	PAGE 2
COLLET CHUCK CYLINDER	UNIT 'B'	PAGE 3
RECEDING TOOL HOLDER	UNIT 'C'	PAGE 3
COLUMN	UNIT 'D'	PAGE 4
HYDRAULIC CUTOFF	UNIT 'E'	PAGE 6
TOOL HOLDERS	UNIT 'F'	PAGE 8
FEED PUMP	UNIT 'G'	PAGE 8
ROLLER CUTTER	UNIT 'H'	PAGE 8
ROLLER FEED	UNIT 'J'	PAGE 9
STOCK STOP	UNIT 'K'	PAGE 10
SLIDE CHAMFER ATTACHMENT	UNIT 'L'	PAGE 11
ARM CHAMFER ATTACHMENT	UNIT 'M'	PAGE 12

THIS PARTS CATALOG HAS BEEN PREPARED TO SIMPLIFY THE ORDERING OF REPAIR PARTS.

WHEN ORDERING:

1. SPECIFY NUMBER OF PIECES WANTED.
2. GIVE SIZE AND SERIAL NUMBER OF MACHINE. *
3. GIVE NUMBER AND NAME OF PART EXACTLY AS SHOWN IN CATALOG.
4. GIVE PURCHASE ORDER NUMBER COVERING ORIGINAL MACHINE.

EXAMPLE:

REQUIRED: FEED DOG FOR THE CUTOFF UNIT

ORDER:

1 - E-26 FEED DOG, DRAWING NUMBER B-33096
FOR #35 AUTOMATIC CUTTING-OFF LATHE, SER. 17931

*THE SERIAL NUMBER OF THE MACHINE IS STAMPED ON THE SPEED PLATE, ALSO ON THE HOUSING FLANGE AS SHOWN ON PAGE 1.

CROP END CUTTING-OFF LATHE

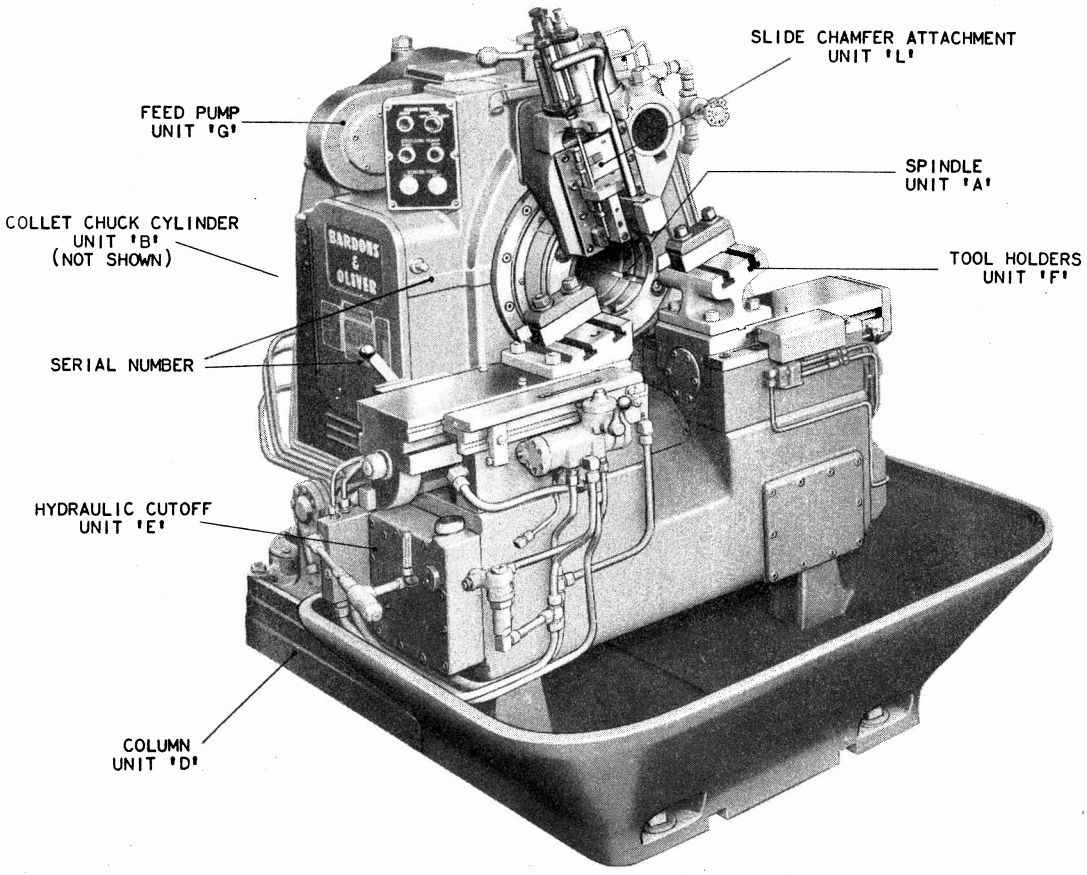

COUPLING CUTTING-OFF LATHE

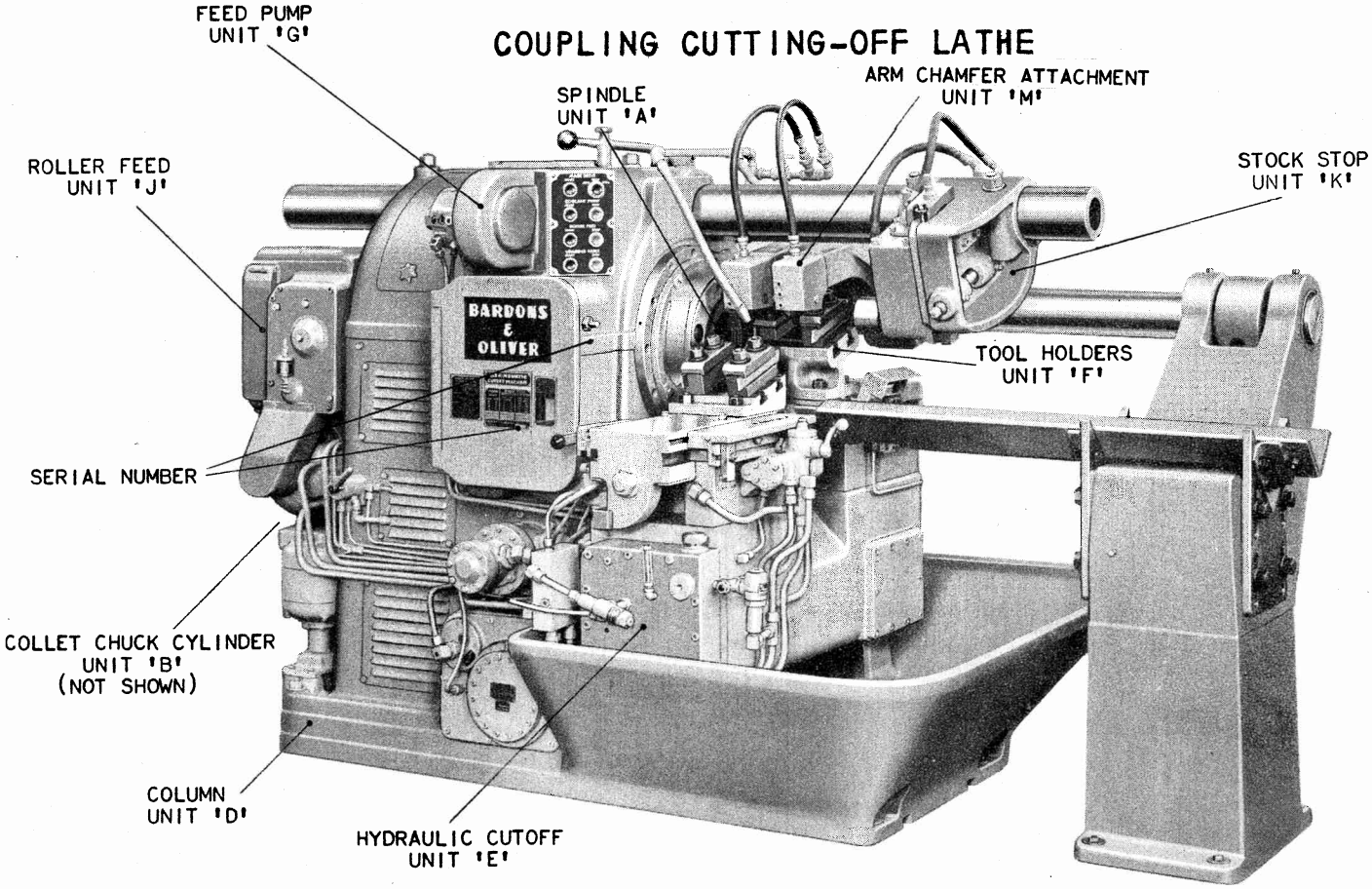

SPINDLE - UNIT 'A'

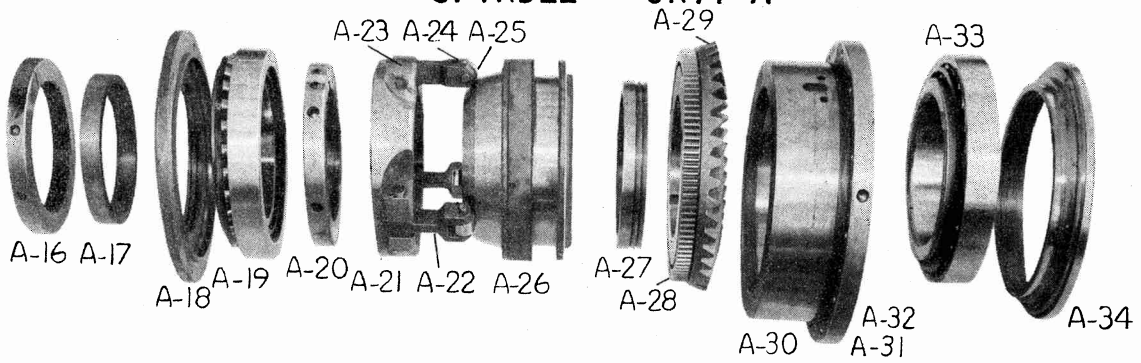

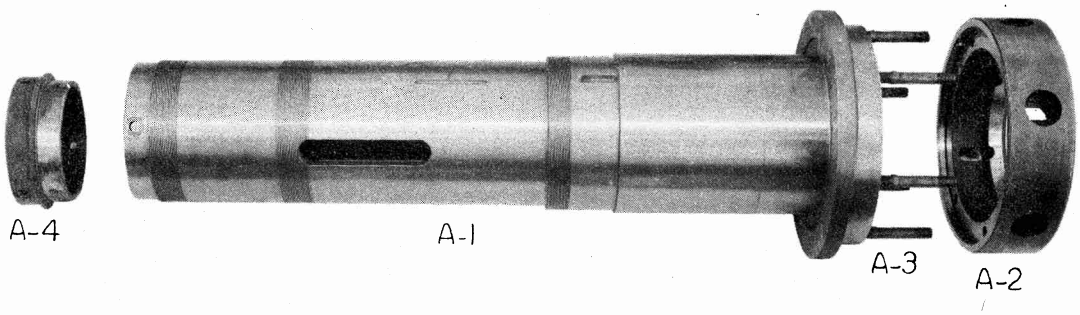

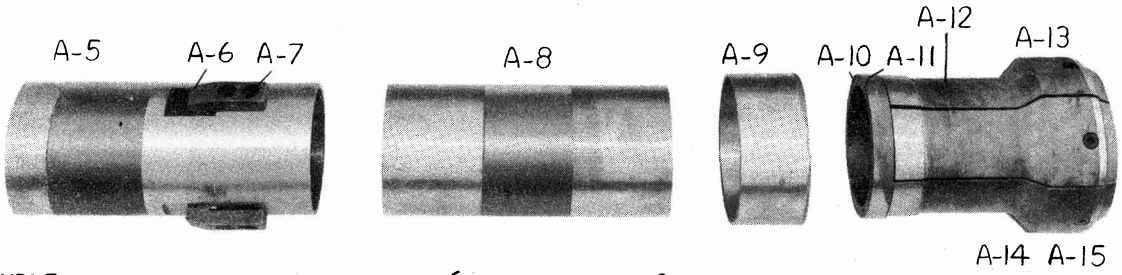

A-1	SPINDLE		A-56757
A-2	COLLET RING		A-55293
A-3	COLLET RING STUD	(6)	B-51588
A-4	SPINDLE END BUSHING		B-51637
A-5	FOLLOWER - EXTENSION ASSEMBLY		A-51582
A-6	FOLLOWER SHOE		A-51580
A-7	FOLLOWER SHOE SCREW	(6)	C-2421
A-8	PLUNGER		A-57032
A-9	LINER		B-56766
A-10	HINGE RING		B-51583
A-11	HINGE PIN - NOT SHOWN	(6)	C-2423
A-12	COLLET		A-55292
A-13	COLLET PADS - NOT SHOWN	(6)	A-51589
A-14	COLLET PAD SCREWS	(6)	C-1760
A-15	COLLET SPRING - NOT SHOWN	(6)	B-60090
A-16	SPINDLE ADJUSTING NUT		A-51683
A-17	REAR SPINDLE SPACER		B-51685
A-18	REAR SPINDLE CLOSURE		A-51682
A-19	REAR SPINDLE BEARING		93125/93787
A-20	ADJUSTING NUT		A-57030
A-21	FINGER HOLDER		A-57029
A-22	FINGER	(3)	B-51576
A-23	PIVOT PIN	(3)	B-51577
A-24	ROLLER PIN	(3)	B-51578
A-25	ROLLER	(3)	B-51593
A-26	WEDGE ASSEMBLY		A-51573
A-27	SPINDLE NUT		A-56756
A-28	RING SPUR GEAR 110T		A-56636
A-29	SPIRAL BEVEL GEAR 40T		A-56592
A-30	BEARING CARTRIDGE		A-59363
A-31	FRONT BRG. ADJUSTING NUT		A-56760
A-32	OIL RING		A-59361
A-33	FRONT BEARING		EE-130902 /131400
A-34	FRONT CLOSURE PLATE		A-59362

COLLET CHUCK CYLINDER - UNIT 'B'

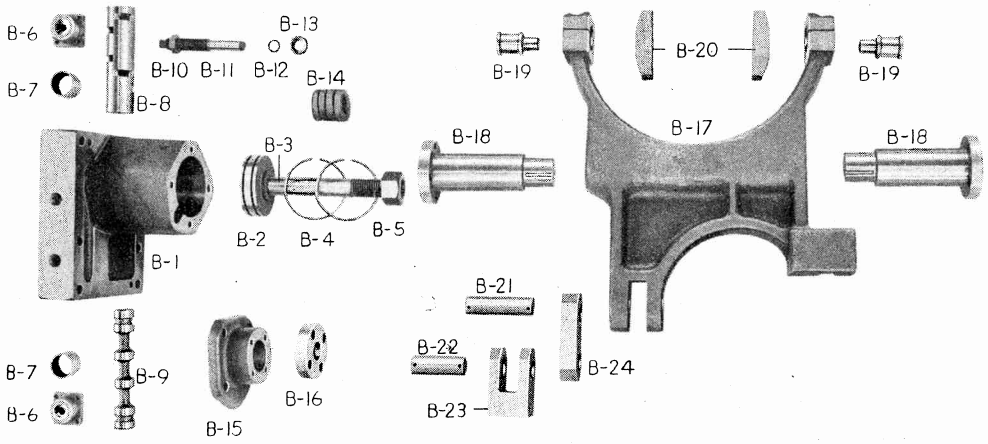

B-1	CYLINDER	L-57013	B-13	O - RING SEAT	B-55165
B-2	PISTON HEAD	B-57015	B-14	PACKING	B-51590
B-3	PISTON ROD	B-57016	B-15	CYLINDER CLOSER	A-57014
B-4	PISTON RING		B-16	PACKING GLAND	B-57018
B-5	HEX NUT		B-17	YOKE	A-57034
B-6	VALVE CLOSER	(2) B-57022	B-18	YOKE PIVOT	B-57023
B-7	SPACER	(2) B-57021	B-19	WEDGE SHOE STUD	(2) B-57027
B-8	LINER	A-57019	B-20	WEDGE SHOE	(2) B-57026
B-9	PLUNGER	B-57020	B-21	LINK PIN	B-51569
B-10	HEX JAM NUT		B-22	LINK PIN	B-51526
B-11	STOP SCREW	B-51563	B-23	CONNECTING NUT	B-56972
B-12	O - RING		B-24	LINK	B-51568

RECEDING TOOL HOLDER - UNIT 'C'

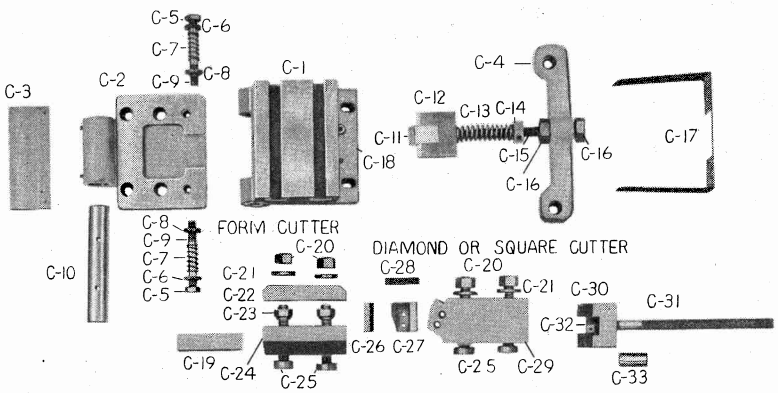

C-1	BASE	A-53666	C-10	PIVOT STUD	B-53671
C-2	BASE PLATE	A-53665	C-11	RAISING BLOCK	B-53668
C-3	FRONT GUARD	B-53672	C-12	REST BLOCK	B-53669
C-4	ROD SUPPORT	A-53667	C-13	SPRING	C-1992
C-5	HEX JAM NUT	(2)	C-14	SPRING ADJUSTING NUT	B-61743
C-6	WASHER	(2) C-1071	C-15	ROD	B-33718
C-7	SPRING	(2) C-1507	C-16	LOCKNUT	(2) B-61744
C-8	CONVEX WASHER	(2) C-1407	C-17	REAR GUARD	A-53673
C-9	STUD	(2) B-61742	C-18	BASE BLOCK	B-53670

FORM CUTTER

C-19	FORM CUTTER	B-33722
C-20	HEX NUT	(2)
C-21	WASHER	(2) C-1061
C-22	CAP	A-55906
C-23	NUT	(2) B-31072
C-24	TOOL HOLDER	A-55907
C-25	TEE BOLT	(2) B-60462

DIAMOND CUTTER

C-26	CUTTER	B-59980
C-27	CAP	B-57457
C-28	BLOCK	B-58853
C-29	TOOL HOLDER	A-57456
C-30	REST BLOCK	B-57461
C-31	ROD	B-52700
C-32	HEX NUT	
C-33	SPACER	B-58228

COLUMN - UNIT 'D'

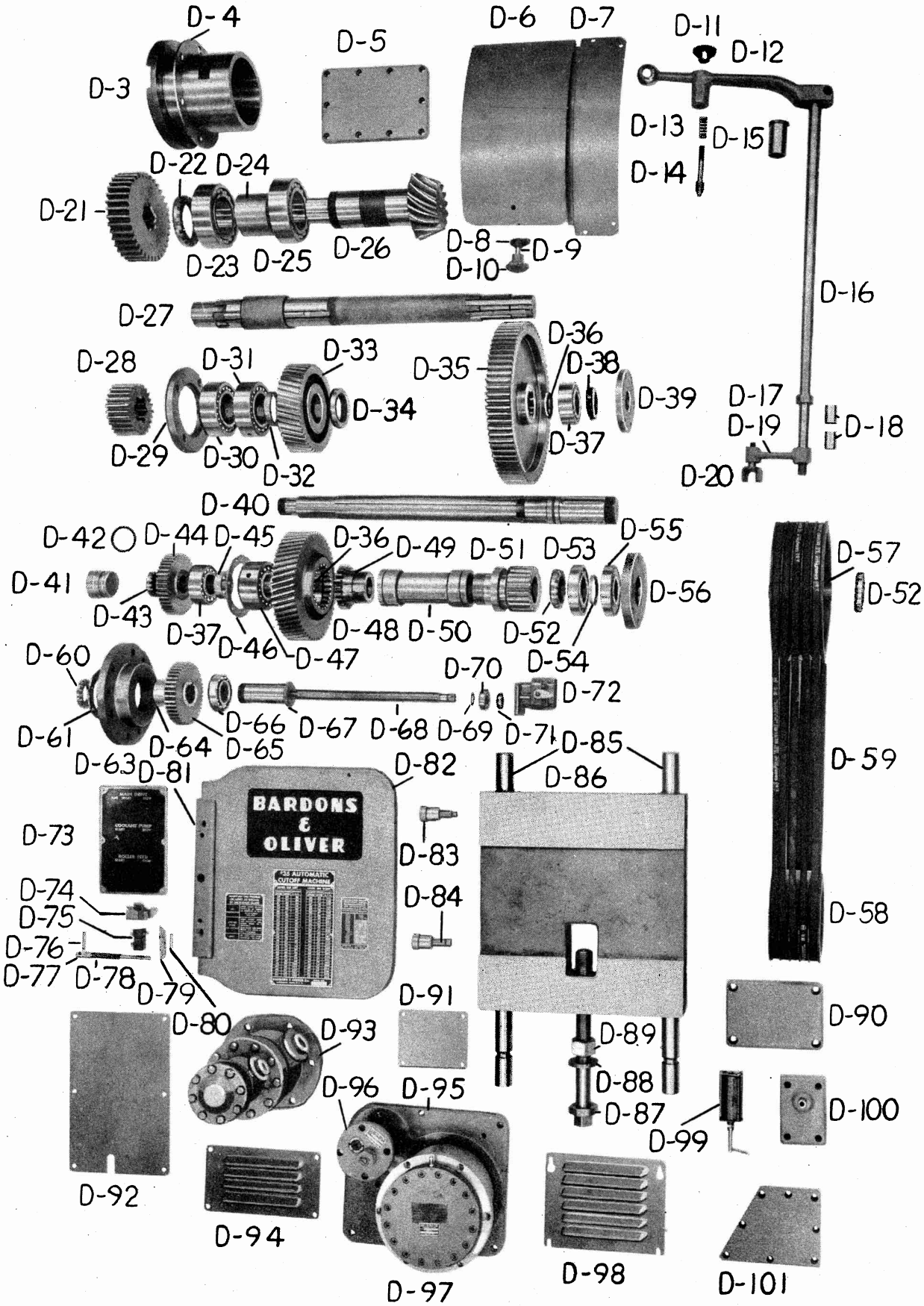

COLUMN - UNIT 'D'

D-1	COLUMN	(NOT SHOWN)	L-57000
D-2	HOUSING	(NOT SHOWN)	L-57370
D-3	PINION CARTRIDGE		A-56721
D-4	CARTRIDGE SPACER		B-56723
D-5	HOUSING COVER		A-57509
D-6	HOUSING COVER		A-57749
D-7	HOUSING COVER		B-57750
D-8	CAM LATCH		B-50735
D-9	CAM LATCH STEM		B-57754
D-10	KNOB		B-47915
D-11	KNOB		B-57527
D-12	SHIFTER LEVER		A-57506
D-13	PLUNGER SPRING		B-42975
D-14	PLUNGER		B-57526
D-15	SLEEVE		B-57525
D-16	SHIFTER SHAFT		A-57522
D-17	COLLAR		B-57523
D-18	BUSHING	(2)	
D-19	FORK ARM		B-57510
D-20	GEAR SHIFT FORK		B-57524
D-21	CHANGE GEAR		TO SUIT
D-22	LOCK WASHER & NUT		
D-23	BALL BEARING		5216-KF
D-24	SPACER & SHIM		B-58874
D-25	BALL BEARING		5216-K
D-26	SPIRAL BEVEL PINION & SLEEVE		A-56593
D-27	SHAFT		A-56746
D-28	CHANGE GEAR		TO SUIT
D-29	COVER		A-56719
D-30	BALL BEARING		5213-KF
D-31	BALL BEARING		5213-K
D-32	SPACER		B-56831
D-33	GEAR 44T		A-56772
D-34	LOCK WASHER & NUT		
D-35	GEAR 78T		A-56750
D-36	SPACER	(2)	B-56834
D-37	BALL BEARING		5210-K
D-38	LOCK WASHER & NUT		
D-39	CLOSER		B-56716
D-40	DRIVE SHAFT		A-56755
D-41	PLUG		B-59243
D-42	O-RING		
D-43	LOCK WASHER & NUT		
D-44	GEAR 41T		B-56835
D-45	SPACER		B-56841
D-46	BEARING RETAINER		B-48246
D-47	BALL BEARING		5310
D-48	GEAR 55T		A-56771
D-49	CLUTCH GEAR 21T		A-56754
D-50	SLEEVE		A-56752
D-51	GEAR 21T		A-56753
D-52	LOCK WASHER & NUT		
D-53	BALL BEARING		212-S
D-54	SPACER		B-56838
D-55	BALL BEARING		212-SF
D-56	CLOSER		A-56713
D-57	DRIVEN PULLEY		TO SUIT
D-58	DRIVER PULLEY		TO SUIT
D-59	V - BELTS		TO SUIT
D-60	LOCK WASHER & NUT		
D-61	RETAINER		B-57566
D-62	BALL BEARING	(NOT SHOWN)	209-SF
D-63	PUMP ADAPTER		A-57565
D-64	SPACER		B-56833
D-65	GEAR 42T		B-56837
D-66	BALL BEARING		209-S
D-67	COUPLING		A-57365
D-68	SHAFT		B-56843
D-69	SPACER		B-56839
D-70	BALL BEARING		204-S
D-71	LOCK WASHER & NUT		
D-72	GEAR PUMP		
D-73	PUSH BUTTON COVER		A-57475
D-74	SWITCH BRACKET		A-57477
D-75	LIMIT SWITCH		
D-76	PLUNGER PIN		C-371
D-77	PLUNGER		B-57480
D-78	PLUNGER SPRING		B-50357
D-79	SWITCH LEVER		B-57478
D-80	LEVER PIN		B-57479
D-81	HINGE BRACKET		A-57512
D-82	CHANGE GEAR COVER		A-57511
D-83	LOCK SCREW BUSHING	(2)	B-57585
D-84	LOCK SCREW	(2)	B-57584
D-85	GUIDE ROD	(2)	B-57500
D-86	MOTOR PLATE		TO SUIT
D-87	MOTOR ADJ. SCREW		A-57499
D-88	WASHER		C-1076
D-89	HEX NUT		
D-90	FEED PUMP INSP. COVER		A-57508
D-91	COVER		B-57574
D-92	HOUSING COVER		B-57657
D-93	COLLET & RAPID TRAV. PUMP		
D-94	UPPER REAR COVER		A-57643
D-95	ACCUMULATOR MT'G. PLATE		A-57505
D-96	COMBINATION VALVE		
D-97	ACCUMULATOR		
D-98	UPPER FRONT COVER		A-57639
D-99	OIL FILTER		
D-100	OIL FILTER BRACKET		B-57514
D-101	OIL PUMP COVER		A-57515
D-102	FRONT CENTER COVER	(NOT SHOWN)	A-57638
D-103	BELT HOUSING	(NOT SHOWN)	A-59207
D-104	BELT GUARD	(NOT SHOWN)	A-59208
D-105	BINDER BOLT - 3	(NOT SHOWN)	B-51790

HYDRAULIC CUTOFF - UNIT 'E'

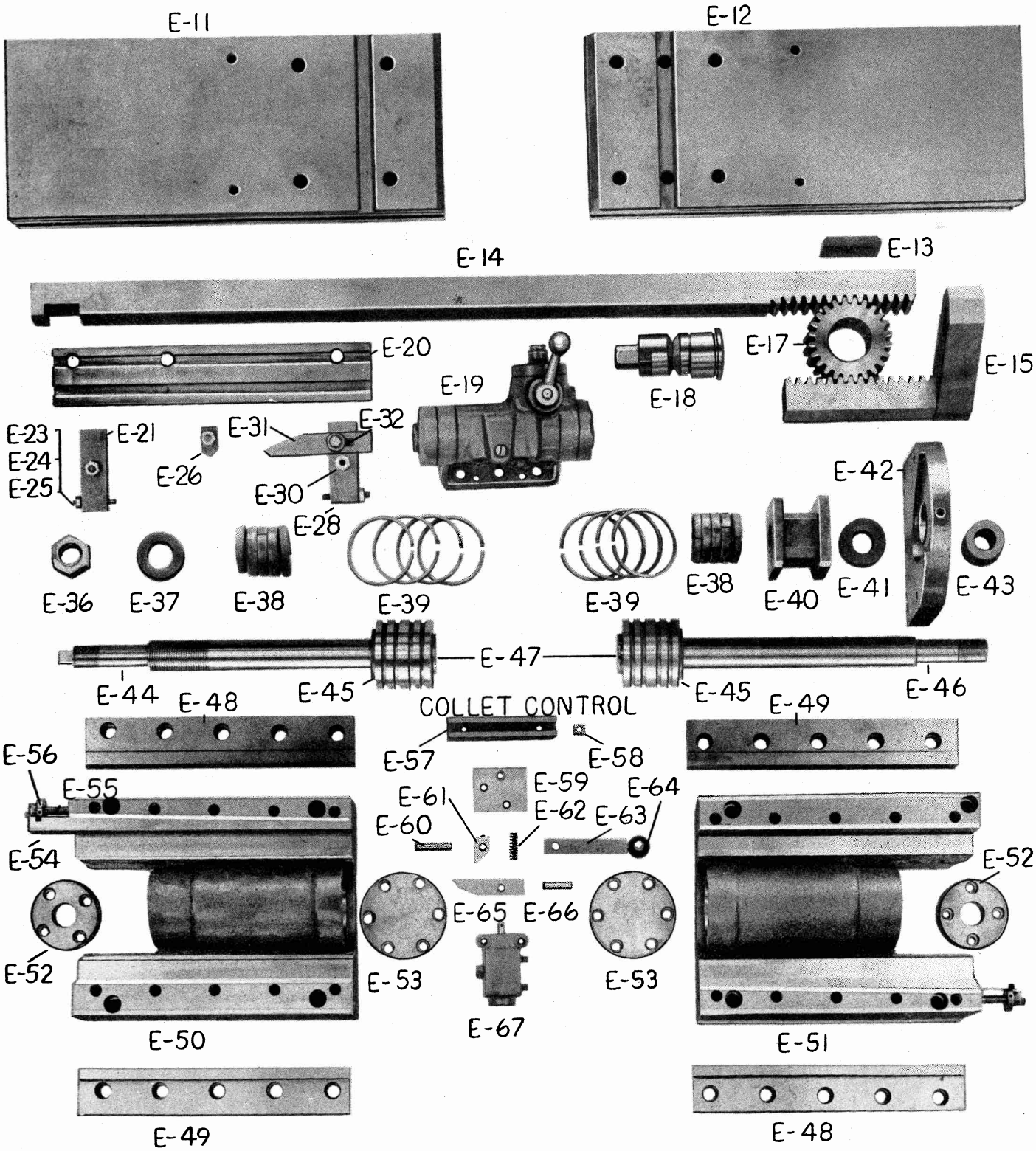

HYDRAULIC CUTOFF - UNIT'E'

E-1	KNEE	(NOT SHOWN)	L-57001
E-2	VALVE RETAINER	(NOT SHOWN)	B-57182
E-3	RETAINER O-RING	(NOT SHOWN)	
E-4	NEEDLE VALVE	(NOT SHOWN)	B-57183
E-5	NEEDLE O-RING -2-	(NOT SHOWN)	
E-6	OIL CAP	(NOT SHOWN)	B-36536
E-7	OIL GAGE	(NOT SHOWN)	
E-8	MANIFOLD	(NOT SHOWN)	A-59382
E-9	FRONT END COVER	(NOT SHOWN)	A-57051
E-10	REAR END COVER	(NOT SHOWN)	A-60416
E-11	FRONT SLIDE		L-56977
E-12	REAR SLIDE		L-56978
E-13	RACK SHOE		B-51648
E-14	LONG RACK		A-56942
E-15	SHORT RACK		A-56941
E-16	RACK GUARD	(NOT SHOWN)	A-60820
E-17	PINION		B-40031
E-18	PINION STUD		B-61473
E-19	REVERSING VALVE		
E-20	TEE SLOT BRACKET		A-57660
E-21	RETURN DOG		B-36588
E-22	RETURN TEE BOLT	(NOT SHOWN)	C-2092
E-23	SPRING		B-31931
E-24	SPRING RETAINER		B-57451
E-25	PLUNGER		B-57450
E-26	FEED DOG		B-33096
E-27	FEED TEE BOLT	(NOT SHOWN)	C-609
E-28	FORWARD DOG		B-57452
E-29	FORWARD TEE BOLT	(NOT SHOWN)	C-2094
E-30	TEE BOLT NUT		C-2095
E-31	FORWARD DOG EXTENSION		B-57453
E-32	WASHER		C-1068
E-33	SCALE	(NOT SHOWN)	B-40416
E-34	CONTROL GUARD	(NOT SHOWN)	B-57661
E-35	GUARD SPACER	(NOT SHOWN)	B-57662
E-36	HEX NUT		
E-37	WASHER		C-1076
E-38	PACKING	(2)	B-39845
E-39	PISTON RING	(8)	
E-40	SLIDE ADJUSTING NUT		A-51651
E-41	SPACER		B-52022
E-42	PISTON ROD SUPPORT		A-56915
E-43	NUT		B-56910
E-44	FRONT PISTON ROD		A-56913
E-45	PISTON	(2)	B-52060
E-46	REAR PISTON ROD		A-56914
E-47	PISTON LOCK NUT	(2)	B-52027
E-48	SADDLE CAP	(2)	A-51652
E-49	SADDLE CAP	(2)	A-56921
E-50	FRONT SADDLE		L-56966
E-51	REAR SADDLE		L-56967
E-52	PACKING GLAND	(2)	B-56912
E-53	CYLINDER HEAD	(2)	B-51649
E-54	TAPER GIB	(2)	B-51646
E-55	ADJUSTING STUD	(2)	B-61368
E-56	ADJUSTING NUT		B-61367

COLLET CONTROL

E-57	TEE SLOT BRACKET	B-57438
E-58	TEE NUT	B-51004
E-59	LEVER BLOCK	B-59660
E-60	LEVER PIN	B-59664
E-61	TRIP LEVER	B-59662
E-62	SPRING	B-48439
E-63	LEVER	B-59663
E-64	BAKELITE BALL	
E-65	CAM LEVER	B-59661
E-66	PIN	B-59665
E-67	FOUR WAY VALVE	

TOOL HOLDERS - UNIT 'F'

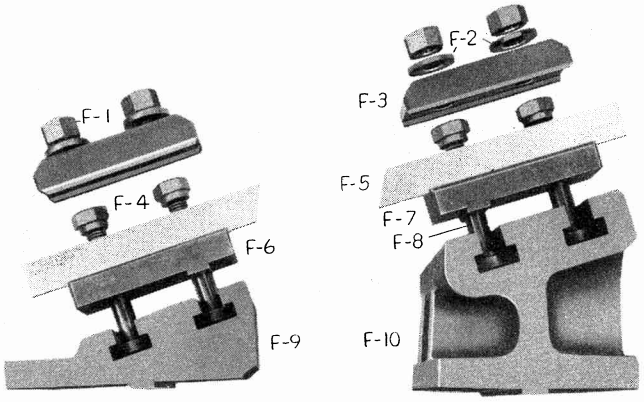

F-1	HEX NUT	(4)	
F-2	WASHER	(4)	C-1061
F-3	TOOL HOLDER CAP	(2)	B-30937
F-4	CLAMP NUT	(4)	B-31072
F-5	BLADE	(2)	B-27793
F-6	FRONT TOOL HOLDER		A-31049
F-7	REAR TOOL HOLDER		A-30936
F-8	TEE BOLT	(4)	B-60462
F-9	FRONT BASE		A-40146
F-10	REAR BASE		A-40147

FEED PUMP - UNIT 'G'

G-1	BRACKET		A-57418
G-2	BALL BEARING	(4)	206-S
G-3	SPACER	(2)	B-51607
G-4	SPACER	(2)	B-57422
G-5	LOCK WASHER & NUT	(2)	
G-6	IDLER GEAR 44T	(2)	B-57420
G-7	IDLER STUD	(2)	B-57421
G-8	FEED PUMP		
G-9	PUMP SHAFT		
G-10	BALL BEARING		212-S
G-11	BALL BEARING		210-S
G-12	PUMP GEAR		A-57419
G-13	CLOSER		
G-14	STRAINER	(NOT SHOWN)	B-60093

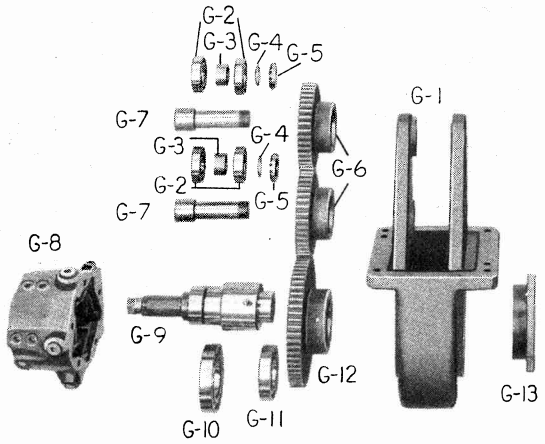

ROLLER CUTTER - UNIT 'H'

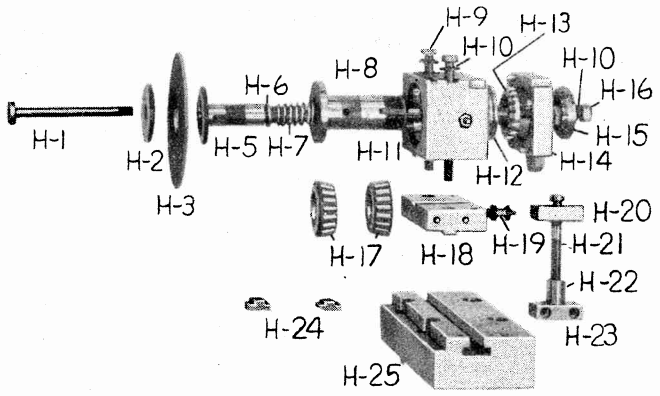

H-1	BOLT		B-56416
H-2	CLAMP		B-56420
H-3	ROLLER CUTTER		A-55905
H-4	CUTTER PIN	(NOT SHOWN)	B-61191
H-5	CUTTER SHAFT		B-56417
H-6	SPRING WASHER		B-56418
H-7	SPRING		B-56426
H-8	BEARING SHAFT		A-56421
H-9	HEX CAP SCREW	(2)	
H-10	WASHER	(3)	C-1069
H-11	CUTTER BLOCK		A-55869
H-12	SPACER		B-55873
H-13	LOCK WASHER & NUT		
H-14	BEARING CLOSER		A-55871
H-15	SPRING RETAINER & WASHER		B-56419
H-16	HEX NUT		
H-17	ROLLER BEARING	(2)	25521/25584
H-18	BASE PLATE		A-55870
H-19	ADJUSTING SCREW		B-55843
H-20	ADJ. SCREW CAP		B-55872
H-21	ADJUSTING SCREW		B-55842
H-22	ADJ. SCREW SLEEVE		B-55964
H-23	ADJ. SCREW BLOCK		B-55844
H-24	TEE NUT	(2)	B-55607
H-25	ADAPTER PLATE		A-55892

ROLLER FEED - UNIT 'J'

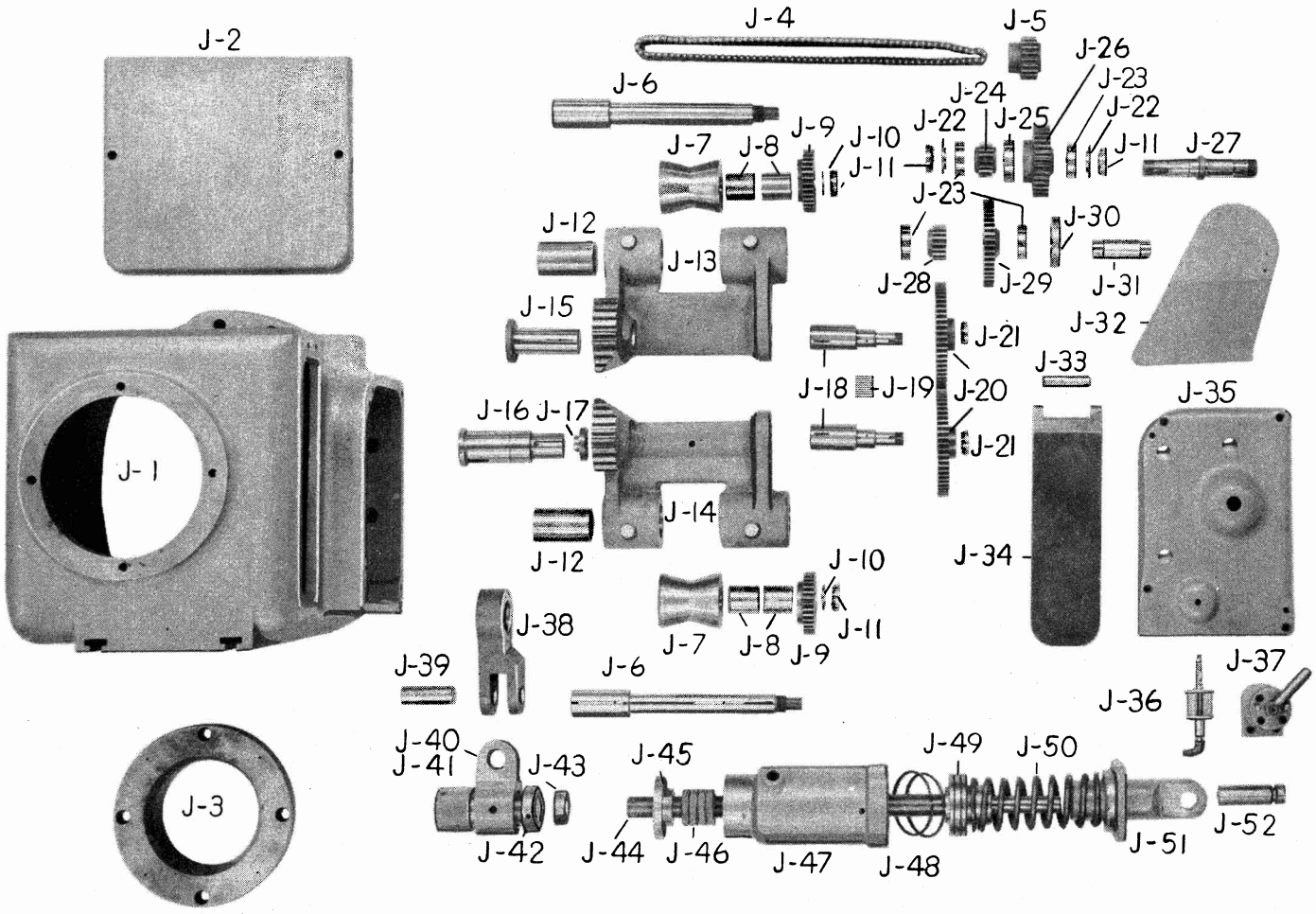

J-1	ROLLER FEED BRACKET		A-55652
J-2	TOP COVER		A-55654
J-3	GUIDE BUSHING		A-59464
J-4	SILENT CHAIN		
J-5	DRIVE SPROCKET		B-51506
J-6	ROLLER SHAFT	(2)	A-55667
J-7	ROLLER	(2)	B-55103
J-8	BUSHING	(4)	
J-9	GEAR 35T	(2)	B-51520
J-10	WASHER	(2)	B-51521
J-11	LOCK WASHER & NUT	(4)	
J-12	BUSHING	(2)	B-55685
J-13	UPPER YOKE		A-55658
J-14	LOWER YOKE		A-55659
J-15	PIVOT SHAFT		B-51523
J-16	PIVOT SHAFT		A-55666
J-17	NUT		B-55665
J-18	SHAFT	(2)	B-55663
J-19	ROLLERS	(56)	
J-20	GEAR 60T	(2)	B-55664
J-21	LOCK WASHER & NUT	(2)	
J-22	GREASE SEAL	(2)	B-51510
J-23	BALL BEARING	(4)	205-SF
J-24	GEAR 18T		B-51509
J-25	BALL BEARING		206-MF
J-26	DRIVEN SPROCKET		B-51507
J-27	SHAFT		B-55662
J-28	GEAR 19T		B-51513
J-29	GEAR 50T		B-51512
J-30	CLOSER		B-51514
J-31	SHAFT		B-51511
J-32	CHAIN GUARD		A-55668
J-33	COVER HINGE		B-55661
J-34	COVER		A-55655
J-35	FRONT COVER		A-55653
J-36	OILER		
J-37	FOUR WAY VALVE		
J-38	LEVER		A-55656
J-39	CONNECTOR PIN		B-51526
J-40	CONNECTOR		A-55657
J-41	ADJUSTING SLEEVE		B-57174
J-42	ADJUSTING NUT		B-51528
J-43	COLLAR		B-51632
J-44	PISTON ROD		A-57173
J-45	PACKING GLAND		B-57176
J-46	PACKING		B-51535
J-47	CYLINDER		A-57171
J-48	PISTON RINGS	(2)	
J-49	PISTON		B-57175
J-50	SPRING		B-57179
J-51	CYLINDER CLOSER		A-57172
J-52	YOKE PIN		B-57178
J-53	TEE NUT (NOT SHOWN)	(4)	B-36070

STOCK STOP - UNIT 'K'

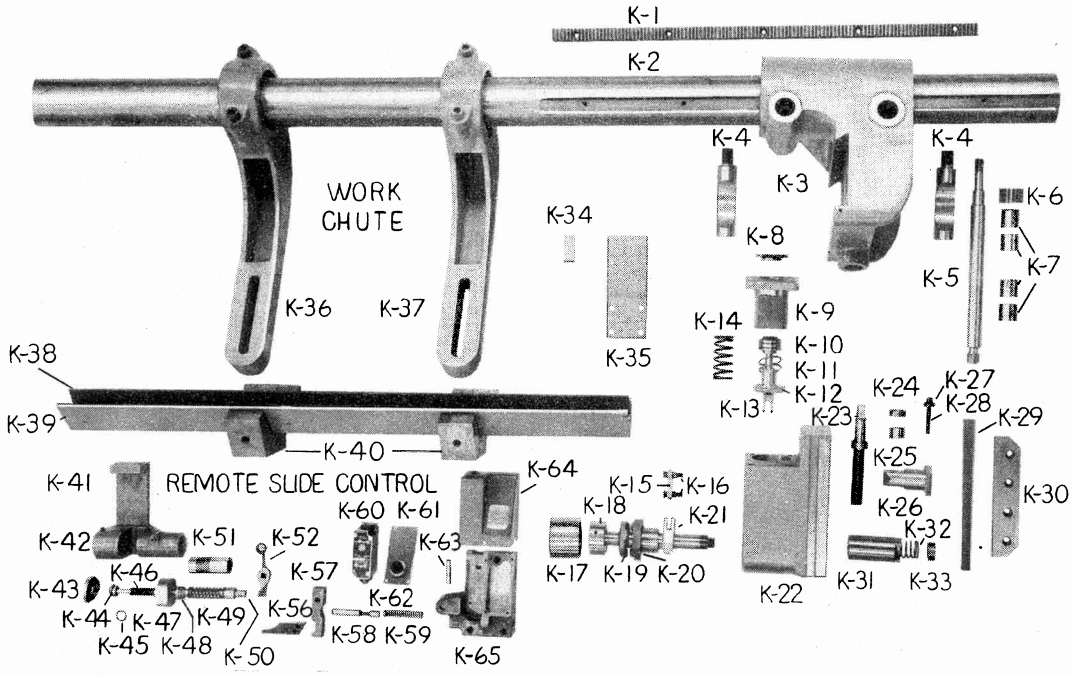

K-1	RACK		A-57396
K-2	STOP BAR		A-57487
K-3	STOCK STOP BRACKET		A-57486
K-4	BINDER BOLT	(2)	B-51441
K-5	PINION SHAFT		A-57394
K-6	PINION		B-57395
K-7	BUSHING	(4)	B-59124
K-8	CYLINDER CLOSER		B-57400
K-9	CYLINDER		A-57390
K-10	PISTON		B-57401
K-11	PISTON RING	(2)	
K-12	CYLINDER CLOSER		B-57392
K-13	FORK		B-57402
K-14	PISTON SPRING		B-36491
K-15	LINK		B-57403
K-16	LINK PIN	(2)	B-57404
K-17	STOP		B-51433
K-18	BALL BEARING		5306-F
K-19	CAM SHAFT		A-57406
K-20	CAM		A-57407
K-21	CRANK LEVER		B-57405
K-22	SLIDE		A-61532
K-23	SLIDE ADJUSTING SCREW		A-57398
K-24	ADJUSTING SCREW COLLAR		B-57399
K-25	BUSHING		
K-26	ADJUSTING NUT		B-57391
K-27	ADJUSTING NUT		C-849
K-28	ADJUSTING STUD		C-862
K-29	TAPER GIB		B-57393
K-30	SLIDE CAP		B-57491
K-31	SPRING RETAINER		B-57408
K-32	CAM SHAFT SPRING		B-57409
K-33	CAM SHAFT NUT		B-57410
K-34	PIPE CLAMP		B-58286
K-35	PIPE SUPPORT		A-58857

WORK CHUTE

K-36	OUTER ARM		A-57769
K-37	INNER ARM		A-57770
K-38	SMALL CHUTE		A-51629
K-39	LARGE CHUTE		A-51628
K-40	SUPPORT BLOCK	(2)	A-51630

REMOTE SLIDE CONTROL

K-41	BRACKET		A-59397
K-42	CYLINDER BLOCK		A-59405
K-43	CLOSER		B-59410
K-44	PISTON		B-59404
K-45	O-RING		
K-46	SPRING		B-59407
K-47	CLOSER		B-59398
K-48	GUIDE		B-59403
K-49	SPRING		B-50339
K-50	PUSHER		B-59402
K-51	SLEEVE		B-57382
K-52	LEVER		B-57386
K-53	FEED DOG	(NOT SHOWN)	B-59009
K-54	VALVE BRACKET	(NOT SHOWN)	A-56228
K-55	SOLENOID VALVE	(NOT SHOWN)	
K-56	ARM		B-57706
K-57	LEVER		B-57705
K-58	PLUNGER		B-57707
K-59	SPRING		B-46850
K-60	LIMIT SWITCH		
K-61	SWITCH PLATE		B-57709
K-62	SELECTOR SWITCH		
K-63	LEVER PIN		B-57708
K-64	BRACKET COVER		A-57704
K-65	SWITCH BRACKET		A-57703

SLIDE CHAMFER ATTACHMENT - UNIT L

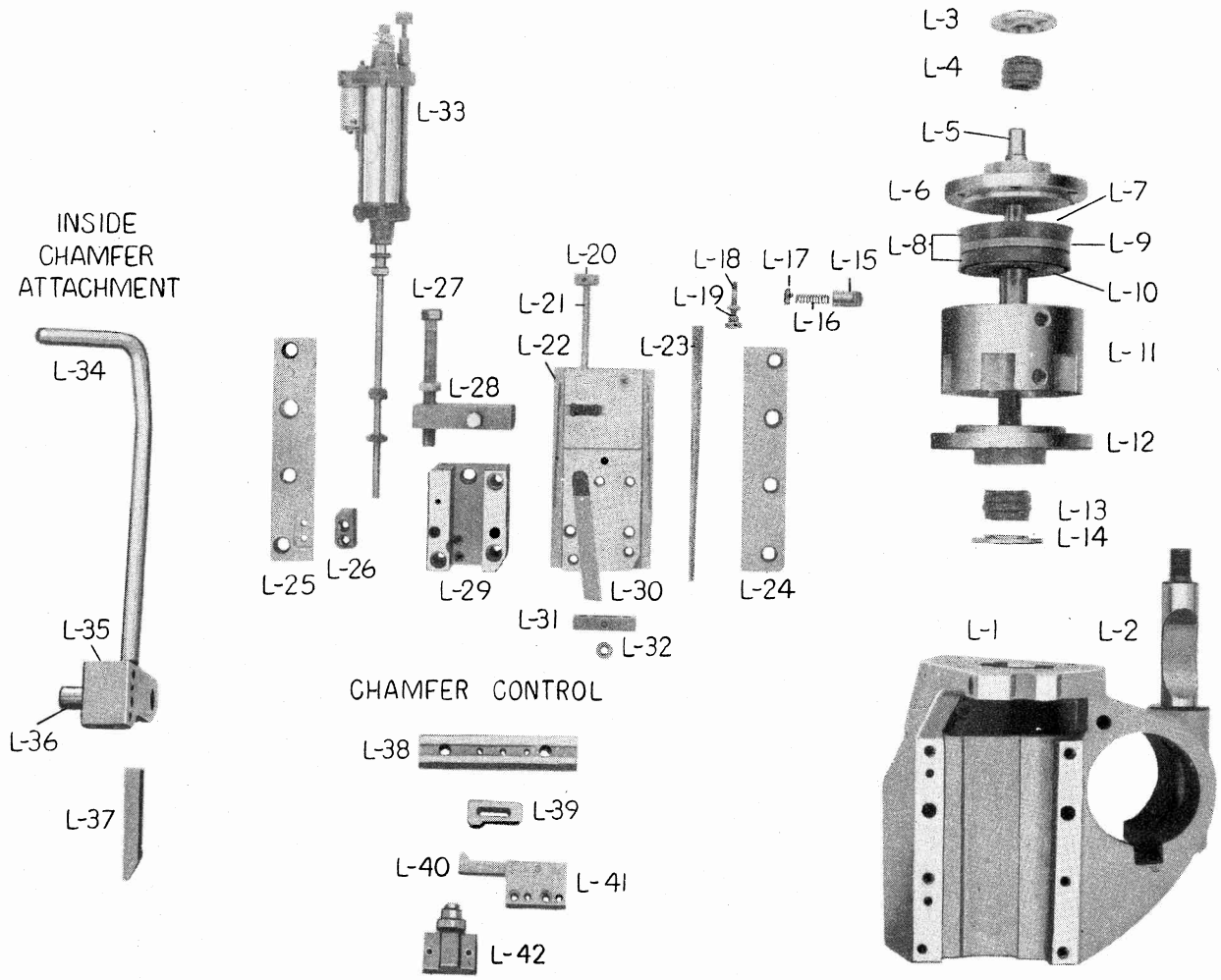

L-1	BRACKET	A-57852	L-18	ADJUSTING STUD	C-860
L-2	BINDER BOLT	B-51441	L-19	ADJUSTING NUT	C-847
L-3	PACKING GLAND	B-57952	L-20	TOOL ADJUSTING NUT	B-58885
L-4	PACKING		L-21	TOOL ADJUSTING SCREW	B-58884
L-5	PISTON ROD	A-57855	L-22	SLIDE	A-57857
L-6	CYLINDER CAP	A-57891	L-23	TAPER GIB	B-54066
L-7	PISTON PLATE	B-3301C	L-24	SLIDE CAP	B-57864
L-8	PACKING CUP	(2)	L-25	SLIDE CAP	B-58068
L-9	PACKING PLATE	B-33011	L-26	SCREW STOP	B-57651
L-10	PISTON	B-59667	L-27	SLIDE ADJUSTING SCREW	B-58718
L-11	CYLINDER	A-57890	L-28	ADJUSTING SCREW SUPPORT	B-57894
L-12	CYLINDER HEAD	A-57863	L-29	TOOL HOLDER BLOCK	A-57853
L-13	PACKING		L-30	CUTTER	B-58863
L-14	PACKING GLAND	B-57856	L-31	ROLLER PLATE	B-57893
L-15	DETENT	B-55194	L-32	ROLLER	B-31978
L-16	DETENT SPRING	B-49839	L-33	HYDRO-CHECK	
L-17	DETENT SCREW	B-34175			

INSIDE CHAMFER ATTACHMENT

L-34	TOOL HOLDER LEVER	A-58717
L-35	TOOL HOLDER	B-57865
L-36	TOOL HOLDER PIN	B-57951
L-37	CUTTER	B-54123

CHAMFER CONTROL

L-38	BRACKET		A-58887
L-39	DOG		B-58890
L-40	CAM		B-58915
L-41	CAM BRACKET		B-58888
L-42	FOUR WAY VALVE		
L-43	CONTROL GUARD	(NOT SHOWN)	A-58917
L-44	GUARD SPACER - 2	(NOT SHOWN)	B-57662

ARM CHAMFER ATTACHMENT - UNIT M

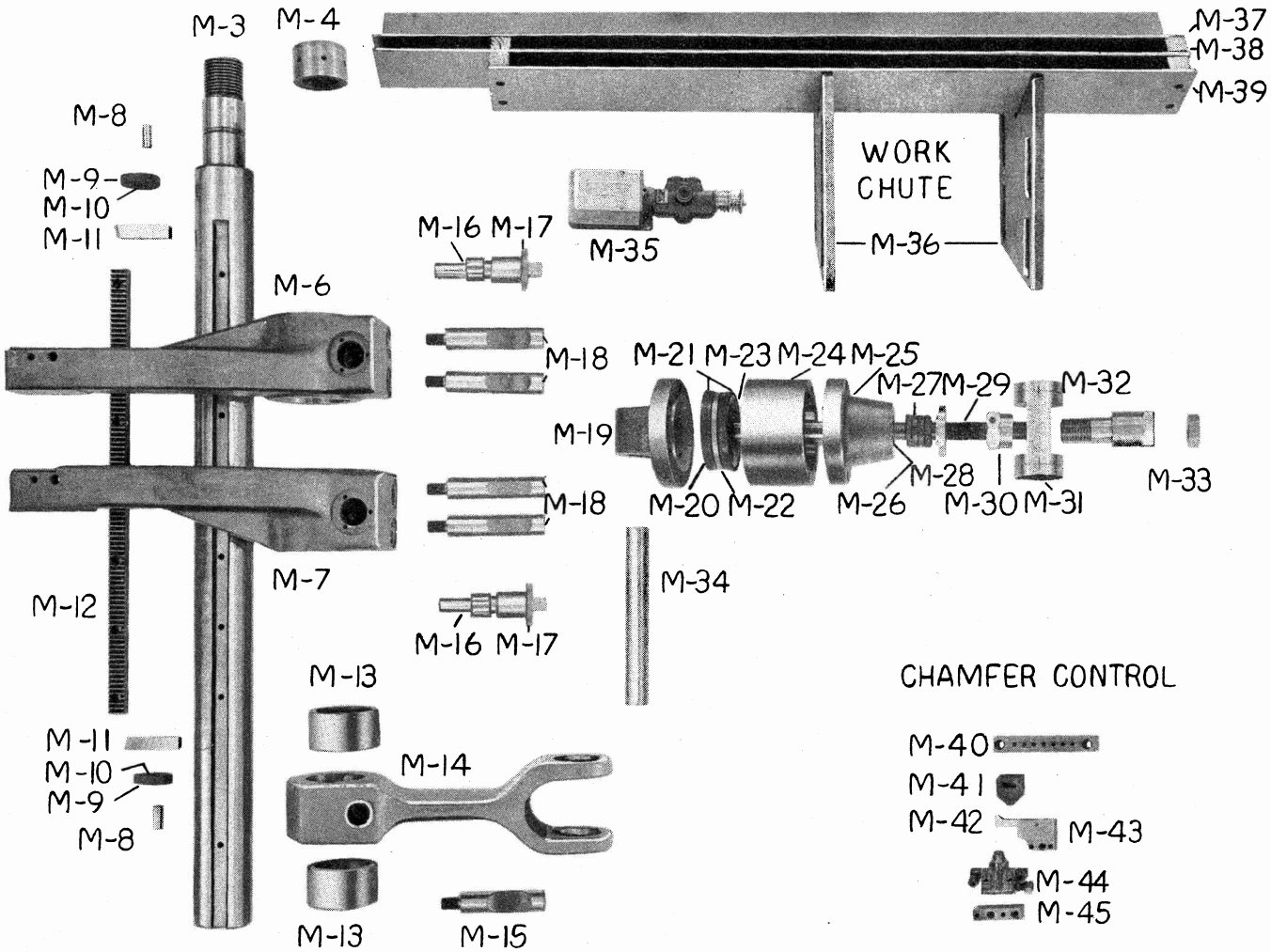

M-1	PEDESTAL	(NOT SHOWN)	A-60350
M-2	BRACKET	(NOT SHOWN)	A-60604
M-3	BAR		A-60357
M-4	BAR NUT		A-13892
M-5	BAR SUPPORT	(NOT SHOWN)	A-60330
M-6	ARM - R-H		A-60624
M-7	ARM - L-H		A-60625
M-8	ROLLER PIN	(2)	B-60628
M-9	ROLLER	(2)	B-37508
M-10	ROLLER BUSHING	(2)	
M-11	CHAMFER CUTTER	(2)	B-27842
M-12	RACK		B-60358
M-13	BAR BUSHINGS	(2)	B-60620
M-14	SWINGING ARM		A-60605
M-15	BINDER BOLT		B-60614
M-16	PINION	(2)	B-52725
M-17	PINION BUSHING	(2)	B-52720
M-18	BINDER BOLT	(4)	B-60629

M-19	CYLINDER ANCHOR CLOSER		A-60622
M-20	PISTON PLATE		B-60480
M-21	PISTON PACKING CUP	(2)	
M-22	PACKING PLATE		B-60471
M-23	PISTON		A-60479
M-24	CYLINDER		A-60621
M-25	CYLINDER CLOSER		A-60623
M-26	CLOSER BUSHING		
M-27	PACKING		B-60351
M-28	PACKING GLAND		B-60484
M-29	PISTON ROD		A-60627
M-30	ADJUSTING NUT		B-60612
M-31	ARM STUD		A-60606
M-32	ADJUSTING NUT		A-60607
M-33	JAM NUT		
M-34	PIVOT PIN		B-60611
M-35	SOLENOID VALVE		

WORK CHUTE

M-36	SUPPORT PLATE	(2)	A-60389
M-37	SMALL TROUGH		A-60388
M-38	LINER TROUGH		A-60386
M-39	MASTER TROUGH		A-60385

CHAMFER CONTROL

M-40	BRACKET		A-58887
M-41	DOG		B-58890
M-42	CAM		B-58915
M-43	CAM BRACKET		A-58888
M-44	4 WAY VALVE		
M-45	CONTROL GUARD	(NOT SHOWN)	A-58917

WHEN ORDERING:

1. SPECIFY NUMBER OF PIECES WANTED.
2. GIVE SIZE AND SERIAL NUMBER OF MACHINE. *
3. GIVE NUMBER AND NAME OF PART EXACTLY AS SHOWN IN CATALOG.
4. GIVE PURCHASE ORDER NUMBER COVERING ORIGINAL MACHINE.

* THE SERIAL NUMBER OF THE MACHINE IS STAMPED ON THE SPEED PLATE, ALSO ON THE REAR SADDLE, AS SHOWN ON PAGE 1.

LITHOD. IN U. S. A.

35-36-1M-3-53